CITY OF MORRO BAY
CITY COUNCIL
AGENDA

The City of Morro Bay provides essential public services and infrastructure to maintain a safe, clean and healthy place for residents and visitors to live, work and play.

Regular Meeting
Tuesday, November 22, 2022 – 5:30 P.M.
Veterans Memorial Hall
209 Surf St., Morro Bay, CA

Pursuant to Assembly Bill 361 (2021-22) and Government Code section 54953 this Meeting will be conducted in a hybrid format with both in-person and virtual public participation. Ways to watch this meeting and submit public comment are provided below.

Public Participation:
Public participation is allowed in the following ways:

- *Community members may attend the meeting in person at the Morro Bay Veterans Hall.*
- *Alternatively, members of the public may watch the meeting and speak during general Public Comment or on a specific agenda item by logging in to the Zoom webinar using the information provided below. Please use the "raise hand" feature to indicate your desire to provide public comment.*

  Please click the link below to join the webinar:
  - *https://us02web.zoom.us/j/82722747698?pwd=aWZpTzcwTHlRTk9xaTlmWVNWRWFUQT09*
    Password: 135692
  - *Or Telephone Attendee: 1 (408) 638-0968 or 1 (669) 900 6833 or 1 (346) 248 7799; Webinar ID: 827 2274 7698; Password: 135692; Press * 9 to "Raise Hand" for Public Comment*
- *Members of the public may watch the meeting either on cable Channel 20 or as streamed on the City website.*
- *Community members are encouraged to submit agenda correspondence in advance of the meeting via email to the City Council at council@morrobayca.gov prior to the meeting. Agenda Correspondence received at council@morrobayca.gov by 10 a.m. on the meeting day will be posted on the City website.*

ESTABLISH QUORUM AND CALL TO ORDER
MOMENT OF SILENCE
PLEDGE OF ALLEGIANCE
RECOGNITION
CLOSED SESSION REPORT
MAYOR & COUNCILMEMBERS' REPORTS, ANNOUNCEMENTS & PRESENTATIONS
CITY MANAGER REPORTS, ANNOUNCEMENTS AND PRESENTATIONS

PRESENTATIONS

- Family Court Awareness Month Proclamation
- Presentation of Appreciation Gift to and Comments by Council Member Dawn Addis

PUBLIC COMMENT

Members of the audience wishing to address the Council on City business matters not on the agenda may do so at this time. For those desiring to speak on items on the agenda, but unable to stay for the item, may also address the Council at this time.

Public comment is an opportunity for members of the public to provide input to the governing body. To increase the effectiveness of the Public Comment Period, the City respectfully requests the following guidelines and expectations be followed:

- Those desiring to speak are asked to complete a speaker slip, which are located at the entrance, and submit it to the City Clerk. However, speaker slips are not required to provide public comment.
- When recognized by the Mayor, please come forward to the podium to speak. Though not required, it is helpful if you state your name, city of residence and whether you represent a business or group. Unless otherwise established by the Mayor, comments are to be limited to three minutes.
- All remarks should be addressed to Council, as a whole, and not to any individual member thereof.
- The Council respectfully requests that you refrain from making slanderous, profane or personal remarks against any elected official, commission and/or staff.
- Please refrain from public displays or outbursts such as unsolicited applause, comments or cheering.
- Any disruptive activities that substantially interfere with the ability of the City Council to carry out its meeting will not be permitted and offenders will be requested to leave the meeting.
- Your participation in City Council meetings is welcome and your courtesy will be appreciated.
- The Council in turn agrees to abide by its best practices of civility and civil discourse according to Resolution No. 07-19.

A. CONSENT AGENDA

Unless an item is pulled for separate action by the City Council, the following actions are approved without discussion. The public will also be provided an opportunity to comment on consent agenda items.

A-1 APPROVAL OF MINUTES FOR THE OCTOBER 11, 2022, CITY COUNCIL MEETING; (CITY CLERK)

RECOMMENDATION: Approve as submitted.

A-2 APPROVAL OF MINUTES FOR THE NOVEMBER 1, 2022, CITY COUNCIL SPECIAL CLOSED SESSION MEETING; (CITY CLERK)

RECOMMENDATION: Approve as submitted.

A-3 PROCLAMATION DECLARING NOVEMBER AS “FAMILY COURT AWARENESS MONTH”; (ADMINISTRATION)

RECOMMENDATION: Approved as submitted

A-4 RESOLUTION MAKING FINDINGS RELATED TO THE CONTINUED EXISTENCE OF A STATE OF EMERGENCY DUE TO COVID-19 AND RE-AUTHORIZING FOR PUBLIC HEALTH AND SAFETY THE CONDUCT OF PUBLIC MEETINGS OF THE LEGISLATIVE BODIES OF THE CITY VIA REMOTE TELECONFERENCING (INCLUDING PARTIALLY REMOTE) FOR A 30-DAY PERIOD PURSUANT TO THE RALPH M. BROWN ACT AS AMENDED BY ASSEMBLY BILL NO. 361; (CITY ATTORNEY)

RECOMMENDATION: Staff recommends Council consider adoption of attached Resolution No. 96-22 reauthorizing for public health and safety the conduct of public meetings of the legislative bodies of the City via remote teleconferencing (including partially remote) for 30 days, thereby allowing the City Council and the City’s advisory bodies to meet remotely (including partially remote) through December 22, 2022.

With approval of this motion and until such further notice, City Council and advisory bodies will continue to hold their meetings in public at the Veterans Hall, with the option for individual Councilmembers and advisory body members to teleconference.

A-5 ADOPTION OF RESOLUTION NO. 97-22 APPROVING AMENDMENT NO. 4 TO THE MORRO BAY TRANSIT AND TROLLEY OPERATIONS AND MANAGEMENT AGREEMENT WITH MV TRANSPORTATION, INC. (PUBLIC WORKS DEPARTMENT)

RECOMMENDATION: Staff recommends the City Council adopt Resolution No. 97-22 approving Amendment No. 4 to the Morro Bay Transit and Trolley Operations and Management Agreement with MV Transportation, Inc.

A-6 ADOPT RESOLUTION NO. 98-22 APPROVING THE 2019 IRWM PLAN AND ADOPT RESOLUTION NO. 99-22 ACCEPTING INTEGRATED REGIONAL WATER MANAGEMENT (IRWM) GRANT FUNDING FOR THE INDIRECT POTABLE REUSE COMPONENT OF THE WRF PROGRAM; (PUBLIC WORKS DEPARTMENT)

RECOMMENDATION: Staff recommends the City Council to adopt Resolution No. 98-22 (Attachment 1) approving the 2019 San Luis Obispo County Integrated Regional Water Management (IRWM) Plan and adopt Resolution No. 99-22 (Attachment 2) authorizing staff to submit a grant application and accept a grant award of $1,200,000 from the San Luis Obispo County Flood Control and Water Conservation District (District) for the Indirect Potable Reuse component of the Morro Bay WRF Program.

A-7 APPROVE AND AUTHORIZE STAFF TO SUBMIT AN APPLICATION FOR A COASTAL CONSERVANCY GRANT FOR THE COLEMAN PARK CULTURAL AND HISTORICAL IMPROVEMENTS PROJECT; (PUBLIC WORKS DEPARTMENT)

RECOMMENDATION: Staff recommends the City Council adopt Resolution No. 100-22 approving and authorizing staff to submit an application for a Coastal Conservancy Grant for the Coleman Park Cultural and Historical Improvements Project.

A-8 ADOPT RESOLUTION NO. 101-22 TO APPROVE PARTICIPATION IN REGIONAL DESALINATION EXECUTABLE SOLUTION AND LOGISTICS (DESAL) PLAN EVALUATION; (PUBLIC WORKS DEPARTMENT)

RECOMMENDATION: Staff recommends the City Council adopt Resolution No. 101-22 approving City participation in the Desalination Executable Solution and Logistics (DESAL) Plan evaluation.

B. PUBLIC HEARING ITEMS

B-1 ADOPTION OF ORDINANCE NO. 655 REPEALING AND REENACTING MULTIPLE CHAPTERS OF TITLE 14 (BUILDINGS AND CONSTRUCTION) OF THE CITY OF MORRO BAY MUNICIPAL CODE, INCORPORATING THE 2022 CALIFORNIA BUILDING STANDARDS CODE, AS ADOPTED BY THE STATE OF CALIFORNIA, AND LOCAL MODIFICATIONS THERETO; (COMMUNITY DEVELOPMENT DEPARTMENT)

RECOMMENDATION: Council review Planning Commission recommendation and introduce for first reading by number and title only, with further reading waived, Ordinance No. 654, (i) repealing Title 17 of the Morro Bay Municipal Code in its entirety and replacing with adoption of Zoning Code; (ii) text amendment to page 5-3 of the Waterfront Master Plan; and (iii) miscellaneous amendments to Chapters 5.50, 5.60, 7.16, 8.32, 9.28, 10.60, 12.08, 12.12, 13.04, 13.20, 14.44, 14.42, 16.36, 16.40, and 16.48 of the Morro Bay Municipal Code with a finding that no further environmental review is required pursuant to State CEQA Guidelines section 15162.

C. BUSINESS ITEMS

C-1 APPROVE WRF CONTRACT AMENDMENTS AND REVIEW AND COMMENT ON FISCAL YEAR 22-23 Q1 WRF QUARTERLY REPORT; (PUBLIC WORKS DEPARTMENT)

RECOMMENDATION: Staff recommends the City Council review and provide input on the Fiscal Year 22-23 1st Quarter (Q1) WRF Quarterly Report and authorize the City Manager to execute the following Water Reclamation Facility (WRF) contract amendments: 1) Amendment No. 6 to the agreement with Anvil Builders, Inc. (Anvil) for the WRF Lift Stations and Offsite Pipelines construction for $646,763, which results in a total not to exceed contract value for Anvil of $34,843,344; and 2) Amendment No. 8 to the agreement with Filanc, Black & Veatch (FBV) for the Water Reclamation Facility Construction project for $957,418 which increases the Guaranteed Maximum Price (GMP) to $78,015,298; and 3) Amendment No. 3 to the agreement with Cogstone Resource Management (Cogstone) for cultural resources monitoring services during construction of the WRF Lift Station and Offsite Pipelines for a total amount of $97,535.90, resulting in a total not to exceed amount of $1,493,527.12.

C-2 ADOPTION OF ORDINANCE 654: AMENDMENTS TO MORRO BAY MUNICIPAL CODE, REPEALING TITLE 17 AND REPLACING WITH ADOPTION OF ZONING CODE/ COASTAL IMPLEMENTATION PLAN (IP) AND ASSOCIATED WATERFRONT MASTER PLAN AND MUNICIPAL CODE AMENDMENTS; (COMMUNITY DEVELOPMENT DEPARTMENT)

RECOMMENDATION: Staff recommends the City Council consider adoption, by second reading and by title only with further reading waived, of Ordinance No. 654 "An Ordinance of the City Council of the City of Morro Bay, California, repealing and replacing Title 17 (Zoning), and miscellaneous amendments to update zoning language references in page 5-3 of the Waterfront Master Plan and Chapters 5.50, 5.60, 7.16, 8.32, 9.28, 10.60, 12.08, 12.12, 13.04, 13.20, 14.44, 14.42, 16.36, 16.40, and 16.48 of the Morro Bay Municipal Code; and direct staff to submit an application for LCP amendment to the California Coastal Commission for certification.

C-3 PRESENTATION OF HARBOR DEPARTMENT ORGANIZATIONAL ASSESSMENT REPORT AND CONSIDERATION OF RESOLUTION NO. 102-22 AUTHORIZING THE ADDITION OF (1) HARBOR PATROL OFFICER POSITION, AND APPROVING THE ASSOCIATED BUDGET AMENDMENT FOR FISCAL YEAR 2022/23; (CITY MANAGER / HARBOR DEPARTMENT)

RECOMMENDATION: Staff recommends the City Council: 1) Receive and file the Harbor Department Organizational Assessment report completed by The Center for Organization Effectiveness (TCFOE), and 2) Adopt Resolution No. 102-22, adding an additional Harbor Patrol Officer (HPO) position to the Fiscal Year 2022/23 Budget, and approving the necessary Budget amendment for addition of that position.

C-4 DISCUSS AND CONSIDER ADOPTION OF RESOLUTION NO. 103-22, ADOPTING THE CITY OF MORRO BAY'S FLAGPOLE POLICY; AND CONSIDER ADOPTION OF RESOLUTION NO. 104-22 APPROVING THE FLYING OF THE RAINBOW PRIDE FLAG AT CITY HALL DURING THE MONTH OF JUNE IN RECOGNITION OF LESBIAN, GAY, BISEXUAL, TRANSGENDER, QUEER, PLUS (LGBTQ+) PRIDE MONTH IN THE CITY OF MORRO BAY; (CITY ATTORNEY)

RECOMMENDATION: Staff recommends Council consider: 1) Adoption of Resolution No. 103-22, adopting the City of Morro Bay's Flagpole Policy; and 2) Adoption of Resolution No. 104-22 Approving the Flying of the Rainbow Pride Flag at City Hall during the month of June in Recognition of Lesbian, Gay, Bisexual, Transgender, Queer, Plus (LGBTQ+) Pride Month in the City of Morro Bay.

C-5 APPROVE AN UPDATED MEMORANDUM OF UNDERSTANDING FOR SHARING CENTRAL COAST COMMUNITY ENERGY BOARD SEATS; (CITY MANAGER)

RECOMMENDATION: Staff recommends the City Council:
1. Approve an amendment to the Agreement and Memorandum of Understanding with the City of San Luis Obispo for sharing Policy Board, Operations Board, and Community Advisory Committee seats on Central Coast Community Energy; and
2. Authorize the City Manager to execute the Amendment to the Agreement and Memorandum of Understanding in a form subject to approval of the City Attorney's Office.

D. COUNCIL DECLARATION OF FUTURE AGENDA ITEMS

E. ADJOURNMENT

The next Regular Meeting will be held on **Tuesday, December 13, 2022 at 5:30 p.m.**

THIS AGENDA IS SUBJECT TO AMENDMENT UP TO 72 HOURS PRIOR TO THE DATE AND TIME SET FOR THE MEETING. PLEASE REFER TO THE AGENDA POSTED AT CITY HALL FOR ANY REVISIONS OR CALL THE CLERK'S OFFICE AT 805-772-6205 FOR FURTHER INFORMATION.

MATERIALS RELATED TO AN ITEM ON THIS AGENDA SUBMITTED TO THE CITY COUNCIL AFTER DISTRIBUTION OF THE AGENDA PACKET ARE AVAILABLE FOR PUBLIC INSPECTION UPON REQUEST BY CALLING THE CITY CLERK'S OFFICE AT 805-772-6205.

IN COMPLIANCE WITH THE AMERICANS WITH DISABILITIES ACT, IF YOU NEED SPECIAL ASSISTANCE TO PARTICIPATE IN A CITY MEETING, PLEASE CONTACT THE CITY CLERK'S OFFICE AT LEAST 24 HOURS PRIOR TO THE MEETING TO INSURE REASONABLE ARRANGEMENTS CAN BE MADE TO PROVIDE ACCESSIBILITY TO THE MEETING.

This Page Intentionally Left Blank

MINUTES - MORRO BAY CITY COUNCIL
REGULAR MEETING – OCTOBER 11, 2022
VETERAN'S MEMORIAL HALL /
TELECONFERENCE – 5:30 P.M.

AGENDA NO: A-1

MEETING DATE: October 25, 2022

Pursuant to Assembly Bill 361 (2021-22) and Government Code section 54953 this Meeting will be conducted in a hybrid format with both in-person and virtual public participation.

PRESENT:	John Headding	Mayor
	Dawn Addis	Council Member
	Laurel Barton	Council Member
	Jennifer Ford	Council Member
	Jeff Heller	Council Member
ABSENT:	None	
STAFF:	Scott Collins	City Manager
	Chris Neumeyer	City Attorney
	Dana Swanson	City Clerk
	Sarah Johnson-Rios	Assistant City Manager/Admin Services Dir.
	Greg Kwolek	Public Works Director
	Scot Graham	Community Development Director
	Daniel McCrain	Fire Chief
	Jody Cox	Police Chief
	Eric Endersby	Harbor Director

ESTABLISH QUORUM AND CALL TO ORDER
Mayor Headding called the meeting to order at 5:30 p.m., with all members present.

MOMENT OF SILENCE
PLEDGE OF ALLEGIANCE
RECOGNITION – None

CLOSED SESSION REPORT – City Attorney Neumeyer stated no reportable action was taken by the City Council in accordance with the Brown Act.

MAYOR & COUNCILMEMBERS' REPORTS, ANNOUNCEMENTS & PRESENTATIONS
https://youtu.be/DJSHmaTUlrQ?t=183

CITY MANAGER REPORTS, ANNOUNCEMENTS AND PRESENTATIONS
https://youtu.be/DJSHmaTUlrQ?t=650

PRESENTATIONS
https://youtu.be/DJSHmaTUlrQ?t=1040

- Dating and Domestic Violence Action Month Proclamation presented to Sam Gotlieb, Chief People & Culture Officer at Lumina Alliance.
- Filipino American History Month Proclamation presented to Rosalie S. Marquez, VP of the Filipino American National Historical Society (FANHS), California Central Coast Chapter.
- Fire Prevention Week Proclamation presented to Fire Chief Daniel McCrain; Fire Engineer/Paramedics Micah Szopinski, Jeff Simpson and Sam Watson; and Reserve Firefighter Keenan Levine

PUBLIC COMMENT
https://youtu.be/DJSHmaTUlrQ?t=2238

Sharon O'Leary, Morro Bay, announced Monday Night Community Dinners and other outreach efforts coordinated by Community Resource Connections.

Linda Quesenberry, Los Osos Cares Executive Director, announced an upcoming Free Health Care event sponsored by the Latino Health Coalition to be held on Sunday, October 23rd from 1:00 – 5:00 p.m. at 2050 Ironwood Ave., Morro Bay.

Bill Luffee, Morro Bay, shared a PowerPoint presentation and spoke in favor of Measure B-22.

Bob Keller, Morro Bay, provided a recap of the Maritime Museum event held on October 8th.

Aaron Ochs, Morro Bay, spoke regarding the importance of leadership in times of uncertainty and stated the Vistra battery storage project was incompatible with the Morro Bay community.

Linda Winters, Morro Bay, commented on the recent candidate forum.

Jon Elliott announced the 8th Annual Morro Bay Trick-or-Treat event to be held Saturday, October 29th from 2:00 – 5:00 p.m.

John Weiss, Morro Bay resident and business owner, commented on the water reclamation facility project and asked residents to vote for Carla Wixom, Zara Landrum and Sarah Robinson.

David Duringer, Morro Bay, urged the City Council to repeal Ordinance No. 644 passed unanimously last year requiring firearms be locked up and unavailable for self-defense.

Tim Crowley, Morro Bay, commented on the recent candidate forum.

Rachel Wilson, Cayucos, spoke in support battery energy storage facilities if located away from a population center.

Garry Johnson, Morro Bay, opposed a lithium battery storage facility in Morro Bay.

Deborah Howe, Vice President of South Bay Women's Network a 501(c)(3) organization, announced a fundraising event to be held October 29th. Visit www.sbwn.org for more information.

Betsy Gaudette-Cross, Morro Bay, spoke against a lithium storage plant being located in Morro Bay.

Lynda Merrill, Morro Bay, thanked Linda Winters and Tim Crowley for their comments and shared her appreciation for the Mayor, Council Members and Staff.

Betty Winholtz, Morro Bay, responded to comments made by candidates regarding the Harbor Fund and stated her opposition to Measure B-22.

Casey Cordes, Morro Bay, spoke in favor of increased height restrictions for downtown business district.

Melanie Williams-Mahan, Morro Bay, expressed concern about the proposed battery energy storage facility.

Mayor Headding closed public comment.

The Council and staff responded to issues raised during public comment.

A. CONSENT AGENDA
https://youtu.be/DJSHmaTUlrQ?t=5419

Unless an item is pulled for separate action by the City Council, the following actions are approved without discussion. The public will also be provided an opportunity to comment on consent agenda items.

A-1 RESOLUTION MAKING FINDINGS RELATED TO THE CONTINUED EXISTENCE OF A STATE OF EMERGENCY DUE TO COVID-19 AND RE-AUTHORIZING FOR PUBLIC HEALTH AND SAFETY THE CONDUCT OF PUBLIC MEETINGS OF THE LEGISLATIVE BODIES OF THE CITY VIA REMOTE TELECONFERENCING (INCLUDING PARTIALLY REMOTE) FOR A 30-DAY PERIOD PURSUANT TO THE RALPH M. BROWN ACT AS AMENDED BY ASSEMBLY BILL NO. 361; (CITY ATTORNEY)

RECOMMENDATION: Staff recommends Council consider adoption of attached Resolution No. 87-22 reauthorizing for public health and safety the conduct of public meetings of the legislative bodies of the City via remote teleconferencing (including partially remote) for 30 days, thereby allowing the City Council and the City's advisory bodies to meet remotely (including partially remote) through November 10, 2022.

With approval of this motion and until such further notice, City Council and advisory bodies will continue to hold their meetings in public at the Veterans Hall, with the option for individual Councilmembers and advisory body members to teleconference.

A-2 ADOPTION OF RESOLUTION NO. 88-22 AMENDING THE 2022 CITY COUNCIL MEETING CALENDAR TO CANCEL THE NOVEMBER 8TH REGULAR MEETING (ELECTION DAY) AND REESTABLISH THE NOVEMBER 22ND REGULAR MEETING; (CITY MANAGER)

RECOMMENDATION: Staff recommends the City Council adopt Resolution No. 88-22 approving the amended 2022 City Council Meeting Calendar.

A-3 ADOPTION OF RESOLUTION NO. 89-22 AUTHORIZING THE CITY OF MORRO BAY TO ENTER INTO A 2022/2023 SURRENDERED AND ABANDONED VESSEL EXCHANGE GRANT CONTRACT WITH THE STATE OF CALIFORNIA DIVISION OF BOATING AND WATERWAYS IN THE AMOUNT OF $15,000.00 FOR REMOVAL OF ABANDONED/SURRENDERED VESSELS AND HAZARDS TO NAVIGATION; (HARBOR DEPARTMENT)

RECOMMENDATION: Staff recommends the City Council adopt Resolution No. 89-22 authorizing the Harbor Director to execute the attached 2022/2023 Surrendered and Abandoned Vessel Exchange (SAVE) Grant Contract Agreement #C22S0607 with the California Division of Boating and Waterways (DBW) for $15,000.00 for the funding of removal of abandoned/surrendered vessels and hazards to navigation.

A-4 PROCLAMATION RECOGNIZING "OCTOBER 2022" AS DATING AND DOMESTIC VIOLENCE ACTION MONTH"; (ADMINISTRATION)

RECOMMENDATION: Approved as submitted

A-5 PROCLAMATION DECLARING THE MONTH OF OCTOBER 2022 AS "FILIPINO AMERICAN HISTORY MONTH"; (ADMINISTRATION)

RECOMMENDATION: Approved as submitted

A-6 PROCLAMATION DECLARING "OCTOBER 9-15, 2022 AS NATIONAL FIRE PREVENTION WEEK"; (ADMINISTRATION)

RECOMMENDATION: Approved as submitted

Mayor Headding opened the public comment for the Consent Agenda; seeing none, the public comment period was closed.

Council Member Heller pulled Item A-3.

MOTION: Council Member Barton moved approval of all items on Consent except Item A-3. The motion was seconded by Council Member Addis and carried 5-0 by roll call vote.

A-3 ADOPTION OF RESOLUTION NO. 89-22 AUTHORIZING THE CITY OF MORRO BAY TO ENTER INTO A 2022/2023 SURRENDERED AND ABANDONED VESSEL EXCHANGE GRANT CONTRACT WITH THE STATE OF CALIFORNIA DIVISION OF BOATING AND WATERWAYS IN THE AMOUNT OF $15,000.00 FOR REMOVAL OF ABANDONED/SURRENDERED VESSELS AND HAZARDS TO NAVIGATION; (HARBOR DEPARTMENT)
https://youtu.be/DJSHmaTUlrQ?t=5470

Staff responded to Council inquiries.

MOTION: Mayor Headding moved approval of Item A-3. The motion was seconded by Council Member Heller and carried 5-0 by roll call vote.

B. PUBLIC HEARINGS - NONE

C. BUSINESS ITEMS

C-1 ACCEPTANCE OF ABC-OTS GRANT AWARDED TO MORRO BAY POLICE DEPARTMENT; (POLICE DEPARTMENT)
https://youtu.be/DJSHmaTUlrQ?t=5742

Police Chief Cox provided the report and responded to Council inquiries.

The public comment period for Item C-1 was opened; seeing none, the public comment period was closed.

MOTION: Council Member Addis moved to adopt Resolution No. 90-22 accepting and appropriating funds from the 2022-2023 Department of Alcoholic Beverage Control Grant for the ABC-OTS Program in the amount of $24,500.00 for overtime expenses incurred during the eleven (11) month program as outlined in this staff report. The motion was seconded by Council Member Ford and carried 5-0 by roll call vote.

C-2 BUDGET-IN-BRIEF UPDATE AND DIRECTION; (CITY MANAGER/ADMINISTRATIVE SERVICES DEPARTMENT)
https://youtu.be/DJSHmaTUlrQ?t=6267
City Manager Collins and Assistant City Manager/Admin Services Director Johnson-Rios provided the report and responded to Council inquiries.

The public comment period for Item C-2 was opened; seeing none, the public comment period was closed.

MOTION: Council Member Addis moved to direct staff to utilize the updated budget-in-brief communication tool, which includes input from the Citizens' Finance Advisory Committee; to post the document online and disseminate virtually as well as in November utility bills; and to utilize this as a template for future budget-in-brief documents to be created by staff after budget adoption each year. The motion was seconded by Mayor Headding for discussion.

Following individual comments, the motion carried 5-0 by roll call vote.

D. COUNCIL DECLARATION OF FUTURE AGENDA ITEMS
https://youtu.be/DJSHmaTUlrQ?t=7432

Council Member Heller shared a list of possible future agenda items, many of which would come back as part of the Council approved work plan. There was no support to add new items to the work plan.

E. ADJOURNMENT

The meeting adjourned at 7:56 p.m.

Recorded by:

Dana Swanson
City Clerk

This Page Intentionally Left Blank

MINUTES - MORRO BAY CITY COUNCIL
SPECIAL CLOSED SESSION MEETING –
NOVEMBER 1, 2022 – 3:30 P.M.
TELECONFERENCE

AGENDA NO: A-2

MEETING DATE: November 22, 2022

City Council conducted this meeting in accordance with Assembly Bill 361 (2021-22) and Government Code section 54953 *in response to the present State of Emergency in existence due to the threat of COVID-19. This meeting was held via teleconference for all participants.*

PRESENT:	John Headding	Mayor
	Dawn Addis	Council Member
	Laurel Barton	Council Member
	Jennifer Ford	Council Member
	Jeff Heller	Council Member
ABSENT:	None	
STAFF:	Scott Collins	City Manager
	Chris Neumeyer	City Attorney
	Joe Pannone	Special Counsel
	Eric Endersby	Harbor Director

ESTABLISH QUORUM AND CALL TO ORDER
Mayor Headding called the meeting to order at 3:30 p.m. with all but Council Member Barton present. Council Member Barton joined the meeting at 3:31 p.m.

SUMMARY OF CLOSED SESSION ITEMS – The Mayor read a summary of Closed Session items.

CLOSED SESSION PUBLIC COMMENT – Mayor Headding opened public comment for items on the agenda; seeing none, the public comment period was closed.

The City Council moved to Closed Session and heard the following items:

CS-1 CONFERENCE WITH REAL PROPERTY NEGOTIATOR - GOVERNMENT CODE SECTION 54956.8

Property:	Outfall Facilities Previously Used by Morro Bay Power Plant, located adjacent to the easterly side of Morro Rock
Negotiating Parties:	Alla Weinstein and Steve Black, Castle Winds, LLC
Agency Negotiators:	Scott Collins, City Manager; and Chris Neumeyer, City Attorney, Joe Pannone, Special Counsel
Negotiation:	Price and Terms of Payment

RECONVENE IN OPEN SESSION – The City Council reconvened in Open Session. The Council did not take any reportable action in accordance with the Brown Act.

ADJOURNMENT - The meeting adjourned at 4:20 p.m.

Recorded by:

Dana Swanson
City Clerk

This Page Intentionally Left Blank

A PROCLAMATION OF THE CITY COUNCIL OF THE CITY OF MORRO BAY, CALIFORNIA, PROCLAIMING NOVEMBER AS "FAMILY COURT AWARENESS MONTH"

CITY COUNCIL
City of Morro Bay, California

WHEREAS, the mission of the Family Court Awareness Month Committee (FCAMC) is to increase awareness on the importance of a family court system that prioritizes child safety and acts in the best interest of children; and

WHEREAS, the mission at the FCAMC is fueled by the desire to create awareness and change in the family court system for the conservatively estimated, 58,000 children a year ordered into unsupervised contact with abusive parents, while honoring the hundreds of children who have been reported as murdered during visitation with a dangerous parent; and

WHEREAS, the mission of the FCAMC is to increase awareness on the importance of empirically based education and training on domestic violence and child abuse, including emotional, psychological, physical, and sexual abuse, as well as childhood trauma, coercive control, and post separation abuse for judges and all professionals working on cases within the family court system; and

WHEREAS, the mission of the FCAMC is to increase awareness on the importance of using scientifically valid, evidence-based, treatment programs and services that are proven in terms of safety, effectiveness, and therapeutic value; and

WHEREAS, the mission at the FCAMC is to educate judges and other family court professionals on evidence-based, peer-reviewed research. Such research is a critical component to making decisions that are truly in the best interest of children. This research includes The Adverse Childhood Experiences (ACEs) Study (co-principal investigator: Vincent Felitti, Kaiser Permanente-CDC); Child Custody Evaluators' Beliefs About Domestic Abuse Allegations (principal investigator: Daniel Saunders, University of Michigan, sponsored by the National Institute of Justice); and Child Custody Outcomes in Cases Involving Parental Alienation and Abuse Allegations (principal investigator: Joan S. Meier, GW Law School, sponsored by the National Institute of Justice); and

NOW, THEREFORE, BE IT RESOLVED, that the Morro Bay City Council does hereby proclaim November as "Family Court Awareness Month" in the City of Morro Bay and encourage all residents to support efforts to prevent the harm of children in the hands of family members and to honor and value the lives of children.

IN WITNESS WHEREOF I have hereunto set my hand and caused the seal of the city of Morro Bay to be affixed this 22nd day of November 2022

_____
JOHN HEADDING, Mayor
City of Morro Bay, California

This Page Intentionally Left Blank

AGENDA NO: A-4

MEETING DATE: November 22, 2022

Staff Report

TO: **Honorable Mayor and City Council** **DATE: November 14, 2022**

FROM: **Chris F. Neumeyer, City Attorney**

SUBJECT: **Resolution Making Findings Related to the Continued Existence of a State of Emergency Due to COVID-19 and Re-Authorizing for Public Health and Safety the Conduct of Public Meetings of the Legislative Bodies of the City via Remote Teleconferencing (including partially remote) for a 30-Day Period Pursuant to the Ralph M. Brown Act as Amended by Assembly Bill No. 361**

RECOMMENDATION

Staff recommends Council consider adoption of attached Resolution No. 96-22 reauthorizing for public health and safety the conduct of public meetings of the legislative bodies of the City via remote teleconferencing (including partially remote) for 30 days, thereby allowing the City Council and the City's advisory bodies to meet remotely (including partially remote) through December 22, 2022.

With approval of this motion and until such further notice, City Council and advisory bodies will continue to hold their meetings in public at the Veterans Hall, with the option for individual Councilmembers and advisory body members to teleconference.

ALTERNATIVES

Do not consider adoption of the attached resolution and/or provide further direction to staff.

FISCAL IMPACT

No immediate fiscal impact.

BACKGROUND

On March 4, 2020, the Governor proclaimed a State of Emergency to exist in California because of the spread of COVID-19. Beginning in March, 2020 the Governor also issued a number of Executive Orders (e.g., N-25-20, N-29-20, N-35-20) (the "Brown Act Orders") for the public health and safety that waived requirements in the Brown Act that expressly or impliedly required the physical presence of City Councilmembers, staff, or the public at meetings of the City Council, Planning Commission and other City boards, commissions and committees ("legislative bodies") that are subject to the Brown Act. The Brown Act Orders allowed City legislative bodies that are subject to the Brown Act to modify how meetings were conducted to protect the health and safety of staff and the public while ensuring transparency and accessibility for open and public meetings. The most recent Brown Act Order expired on September 30, 2021.

Prepared By: __CFN ___ **Dept Review: _____**

City Manager Review: _ SC **City Attorney Review: _CFN**

On September 16, 2021, Governor Newsom signed Assembly Bill 361 ("AB 361") into law. AB 361 was made effective on October 1, 2021, on an urgency basis, to correspond to the timing of expiration of the Brown Act Orders. AB 361 provides for the ability to teleconference (whether completely or hybrid) Brown Act meetings of City legislative bodies for public health and safety reasons under certain conditions, akin to the authority to do so under the Brown Act Orders.

DISCUSSION

Assembly Bill 361 allows City legislative bodies to utilize remote/virtual platforms for public meetings (consistent with certain statutory requirements) during a state of emergency proclaimed by the Governor that includes the City if certain conditions are met.

On October 26, 2021, the City Council adopted Resolution No. 70-21 making findings related to the continued existence of a state of emergency due to COVID-19 and re-authorizing for public health and safety the conduct of public meetings of City's legislative bodies via remote teleconferencing for an initial 30-day period pursuant to the Ralph M. Brown Act as amended by Assembly Bill No. 361. On November 9, 2021, and no later than every 30 days thereafter, through June 28, 2022, the City Council reviewed the need for continuing the conduct of public meetings of City's legislative bodies via remote teleconferencing for public health and safety as authorized by AB 361, and upon making necessary findings, adopted resolutions authorizing such meetings for an additional thirty days. AB 361 Resolution No. 61-22, which was adopted on June 28, 2022, expired by its own terms on July 28, 2022, as AB 361 resolutions are active for thirty days. On August 9, 2022, the City Council upon making necessary findings adopted Resolution No. 72-22, reauthorizing the use of remote teleconferencing by City's legislative bodies for public health and safety, as authorized by AB 361. On August 23, the City Council reviewed the need for continuing the conduct of public meetings of City's legislative bodies via remote teleconferencing for public health and safety as authorized by AB 361, and upon making necessary findings, adopted a resolution authorizing such meetings for an additional thirty days, and the City Council took similar continuing actions thereafter upon making the same findings.

If a state of emergency remains active, or State or local officials have imposed or recommended measures to promote social distancing, AB 361 imposes certain requirements to continue use of its provisions after the initial 30-day period, or a 30-day period thereafter, has elapsed.

Government Code section 54953(e)(3) provides that "not later than 30 days after teleconferencing for the first time pursuant" to AB 361, "and every 30 days thereafter," the City Council shall make the following findings by majority vote for the City to continue using the teleconferencing provisions of AB 361:

1. The City Council has reconsidered the circumstances of the state of emergency; ***and***
2. Either of the following circumstances exist:
    a. The state of emergency continues to directly impact the ability of the members to meet safely in person, ***or***
    b. State or local officials continue to impose or recommend measures to promote social distancing.

At the March 22, 2022 Meeting, the City Council directed staff to continue bringing AB 361 resolutions to provide a remote option for Council Members and Advisory Board members should the need occur.

CONCLUSION

Staff recommends Council consider adoption of the proposed Resolution No. 96-22 making the findings required to re-authorize use of AB 361. Doing so will allow meetings of the City Council, City boards and City commissions to occur by teleconference (including under a hybrid format) for the public health and safety. Continued reliance on AB 361 will require adoption of a new resolution making the required findings every 30 days thereafter.

ATTACHMENT

1. Resolution No. 96-22

RESOLUTION NO. 96-22

**RESOLUTION OF THE CITY COUNCIL
OF THE CITY OF MORRO BAY, CALIFORNIA,
MAKING FINDINGS RELATED TO THE CONTINUED EXISTENCE OF A STATE OF EMERGENCY DUE TO COVID-19 AND RE-AUTHORIZING FOR PUBLIC HEALTH AND SAFETY THE CONDUCT OF PUBLIC MEETINGS OF THE LEGISLATIVE BODIES OF THE CITY VIA REMOTE TELECONFERENCING FOR A
30-DAY PERIOD PURSUANT TO THE RALPH M. BROWN ACT
AS AMENDED BY ASSEMBLY BILL NO. 361**

T H E C I T Y C O U N C I L

City of Morro Bay, California

WHEREAS, the City Council of the City of Morro Bay ("City") is committed to preserving and nurturing public access and participation in meetings of the Legislative Bodies (as that term is defined in Government Code §54952, including the City Council, commissions, boards and committees subject to the Brown Act) of the City; and

WHEREAS, all meetings of the Legislative Bodies are open and public as required by the Ralph M. Brown Act, codified as Government Code §§ 54950 *et seq.*, so that any member of the public may attend, participate, and observe the Legislative Bodies conduct their business; and

WHEREAS, the Brown Act, at Government Code § 54953(e), as amended by Assembly Bill (AB) 361 effective October 1, 2021, makes provision for remote teleconferencing participation in public meetings by members of a Legislative Body without compliance with the provisions of Government Code § 54953(b)(3), subject to the existence of certain conditions; and

WHEREAS, a required condition under Government Code § 54953(e) for its initial use is that the meeting is held during a state of emergency that has been declared by the Governor pursuant to Government Code § 8625, proclaiming the existence of conditions of disaster or of extreme peril to the safety of persons and property within the state caused by conditions as described in Government Code § 8558; and

WHEREAS, a proclamation is made when there is an actual incident, threat of disaster, or extreme peril to the safety of persons and property within the jurisdictions that are within the City's boundaries, caused by natural, technological, or human-caused disasters

WHEREAS, a required condition under Government Code § 54953(e) for its initial use is that state or local officials have imposed or recommended measures to promote social distancing, or that the legislative body is meeting to determine or has previously determined that meeting in person would present imminent risks to the health or safety of attendees; and

WHEREAS, starting in March 2020, in response to the spread of COVID-19 in the State of California, the Governor proclaimed a state of emergency for the State of California and thereafter issued a number of executive orders aimed at containing COVID-19; and

WHEREAS, on March 19, 2020, the City Council adopted Resolution No. 23-20, proclaiming and affirming the existence of a local emergency, and confirming and ratifying proclamation by City's Director of Emergency Services of Existence of a Local Emergency, in response to COVID-19 (Coronavirus). The Legislative Bodies have since conducted meetings via remote teleconferencing consistent with the declaration of local emergency and executive orders issued by the Governor; and

WHEREAS, the executive orders issued by the Governor, among other things, for the public health and safety waived requirements of the Brown Act expressly or impliedly requiring the physical presence of members of the legislative body, the clerk or other personnel of the body, or of the public as a condition of participation in or for the purpose of establishing a quorum for a public meeting; and

WHEREAS, on June 11, 2021, the Governor issued Executive Order N-08-21, which rescinded the modifications made by the aforementioned executive orders, effective September 30, 2021. On September 16, 2021, the Governor signed AB 361, creating a modified set of provisions for local agencies for compliance with the Brown Act relative to remote meetings. AB 361 was made effective on October 1, 2021; and

WHEREAS, on October 26, 2021, the City Council adopted Resolution No. 70-21 making findings related to the continued existence of a state of emergency due to COVID-19 and re-authorizing for public health and safety the conduct of public meetings of City's legislative bodies via remote teleconferencing for an initial 30-day period pursuant to the Ralph M. Brown Act as amended by Assembly Bill No. 361; and

WHEREAS, On November 9, 2021, the City Council reviewed the need for continuing the conduct of public meetings of City's legislative bodies via remote teleconferencing for public health and safety as authorized by AB 361, and upon making necessary findings, adopted Resolution No. 78-21 authorizing such meetings for an additional thirty days; and

WHEREAS, On November 18, 2021, the City Council reviewed the need for continuing the conduct of public meetings of City's legislative bodies via remote teleconferencing for public health and safety as authorized by AB 361, and upon making necessary findings, adopted Resolution No. 81-21 authorizing such meetings for an additional thirty days; and

WHEREAS, On December 14, 2021, the City Council reviewed the need for continuing the conduct of public meetings of City's legislative bodies via remote teleconferencing for public health and safety as authorized by AB 361, and upon making necessary findings, adopted Resolution No. 84-21 authorizing such meetings for an additional thirty days; and

WHEREAS, On January 11, 2022, the City Council reviewed the need for continuing the conduct of public meetings of City's legislative bodies via remote teleconferencing for public health and safety as authorized by AB 361, and upon making necessary findings, adopted Resolution No. 03-22 authorizing such meetings for an additional thirty days; and

WHEREAS, On January 25, 2022, the City Council reviewed the need for continuing the conduct of public meetings of City's legislative bodies via remote teleconferencing for public health and safety as authorized by AB 361, and upon making necessary findings, adopted Resolution No. 07-22 authorizing such meetings for an additional thirty days; and

WHEREAS, On February 22, 2022, the City Council reviewed the need for continuing the conduct of public meetings of City's legislative bodies via remote teleconferencing for public health and safety as authorized by AB 361, and upon making necessary findings, adopted Resolution No. 16-22 authorizing such meetings for an additional thirty days; and

WHEREAS, On March 22, 2022, the City Council reviewed the need for continuing the conduct of public meetings of City's legislative bodies via remote teleconferencing for public health and safety as authorized by AB 361, and upon making necessary findings, adopted Resolution No. 25-22 authorizing such meetings for an additional thirty days; and

WHEREAS, On April 12, 2022, the City Council reviewed the need for continuing the conduct of public meetings of City's legislative bodies via remote teleconferencing (including partially remote) for public health and safety as authorized by AB 361, and upon making necessary findings, adopted Resolution No. 29-22 authorizing such meetings for an additional thirty days; and

WHEREAS, On May 10, 2022, the City Council reviewed the need for continuing the conduct of public meetings of City's legislative bodies via remote teleconferencing (including partially remote) for public health and safety as authorized by AB 361, and upon making necessary findings, adopted Resolution No. 40-22 authorizing such meetings for an additional thirty days; and

WHEREAS, On May 24, 2022, the City Council reviewed the need for continuing the conduct of public meetings of City's legislative bodies via remote teleconferencing (including partially remote) for public health and safety as authorized by AB 361, and upon making necessary findings, adopted Resolution No. 43-22 authorizing such meetings for an additional thirty days; and

WHEREAS, On June 14, 2022, the City Council reviewed the need for continuing the conduct of public meetings of City's legislative bodies via remote teleconferencing (including partially remote) for public health and safety as authorized by AB 361, and upon making necessary findings, adopted Resolution No. 50-22 authorizing such meetings for an additional thirty days; and

WHEREAS, On June 28, 2022, the City Council reviewed the need for continuing the conduct of public meetings of City's legislative bodies via remote teleconferencing (including partially remote) for public health and safety as authorized by AB 361, and upon making necessary findings, adopted Resolution No. 61-22 authorizing such meetings for an additional thirty days, and by its own terms Resolution No. 61-22 expired on July 28, 2022; and

WHEREAS, On August 9, 2022, the City Council adopted Resolution No. 72-22 making findings related to the continued existence of a state of emergency due to COVID-19 and re-authorizing for public health and safety the conduct of public meetings of City's legislative bodies via remote teleconferencing (including partially remote) for a 30-day period pursuant to the Ralph M. Brown Act as amended by Assembly Bill No. 361; and

WHEREAS, On August 23, 2022, the City Council reviewed the need for continuing the conduct of public meetings of City's legislative bodies via remote teleconferencing (including partially remote) for public health and safety as authorized by AB 361, and upon making necessary findings, adopted Resolution No. 78-22 authorizing such meetings for an additional thirty days; and

WHEREAS, On September 13, 2022, the City Council reviewed the need for continuing the conduct of public meetings of City's legislative bodies via remote teleconferencing (including partially remote) for public health and safety as authorized by AB 361, and upon making necessary findings, adopted Resolution No. 83-22 authorizing such meetings for an additional thirty days; and

WHEREAS, On October 11, 2022, the City Council reviewed the need for continuing the conduct of public meetings of City's legislative bodies via remote teleconferencing (including partially remote) for public health and safety as authorized by AB 361, and upon making necessary findings, adopted Resolution No. 87-22 authorizing such meetings for an additional thirty days; and

WHEREAS, On October 25, 2022, the City Council reviewed the need for continuing the conduct of public meetings of City's legislative bodies via remote teleconferencing (including partially remote) for public health and safety as authorized by AB 361, and upon making necessary findings, adopted Resolution No. 94-22 authorizing such meetings for an additional thirty days; and

WHEREAS, the Governor's proclaimed state of emergency and the City's proclaimed local emergency related to COVID-19 remain in effect and encompass the jurisdictional boundaries of the City; and

WHEREAS, the California Department of Public Health continues to impose or recommend measures to promote social distancing, and the Centers for Disease Control and Prevention ("CDC") continues to impose or recommend measures to promote social distancing; and

WHEREAS, Government Code Section 54953(e)(3) requires that the City Council review the need and make findings for continuing the conduct of public meetings of City's legislative bodies via remote teleconferencing as authorized by AB 361 at least once every thirty days until the Governor terminates the state of emergency; and

WHEREAS, for the public health and safety the Council wishes to affirm the need and findings necessary for continuing the conduct of public meetings of City's legislative bodies via remote teleconferencing as authorized by AB 361; and

WHEREAS, the City Council does hereby intend that, as a consequence of the persisting state of emergency and the imposed or recommended social distancing measures, the Legislative Bodies shall be authorized to conduct their meetings without compliance with paragraph (3) of subdivision (b) of Government Code § 54953, as authorized by subdivision (e) of Government Code § 54953, and that the Legislative Bodies shall comply with the requirements to provide the public with access to the meetings as prescribed in paragraph (2) of subdivision (e) of Government Code § 54953; and

WHEREAS, consistent with AB 361, during the effectiveness of this Resolution, the Legislative Bodies meeting pursuant to the requirements of Government Code § 54953(e)(2) and their staff will give notice of the manner by which members of the public may access the Legislative Bodies' meetings and offer public comment; identify and include an opportunity for all persons to attend via a call-in option or an internet-based service option; and allow members of the public to access the meeting, and the agenda shall include an opportunity for members of the public to address the Legislative Body directly.

NOW, THEREFORE, THE CITY COUNCIL OF THE CITY OF MORRO BAY, CALIFORNIA, DOES HEREBY RESOLVE, DECLARE, DETERMINE AND ORDER AS FOLLOWS:

SECTION 1. The foregoing recitals are true and correct and are incorporated herein by reference.

SECTION 2. The City Council hereby acknowledges and affirms the continued effectiveness of the Governor's proclaimed state of emergency and the City's proclaimed local emergency (as may have been amended since their initial proclamation) which encompass their jurisdictional boundaries.

SECTION 3. The City Council finds as follows: 1) they have reconsidered the circumstances of the state of emergency; 2) the state of emergency remains active within their jurisdictional boundaries; 3) the state of emergency continues to directly impact the ability of the City Council, the City's Legislative Bodies, City staff and the public to meet safely in person; and 4) State officials continue to impose or recommend measures to promote social distancing.

SECTION 4. The Legislative Bodies and staff are hereby authorized and directed to take all actions necessary to carry out the intent and purpose of this Resolution, including conducting all open and public meetings of the Legislative Bodies in accordance with Government Code § 54953(e) and other applicable provisions of the Brown Act.

SECTION 5. This Resolution shall take effect immediately upon its adoption by the City Council and shall be effective for until the earlier of (i) December 22, 2022, or (ii) such time as the City Council adopts a subsequent resolution in accordance with Government Code §54953(e)(3)

to extend the time during which the Legislative Bodies may continue to teleconference without compliance with paragraph (3) of subdivision (b) of Government Code §54953.

SECTION 6. Should any provision, section, paragraph, sentence or word of this Resolution be rendered or declared invalid by any final court action in a court of competent jurisdiction or by reason of any preemptive legislation, the remaining provisions, sections, paragraphs, sentences or words of this Resolution as hereby adopted shall remain in full force and effect.

SECTION 7. The City Clerk shall certify to the adoption of this Resolution and enter it into the book of original Resolutions.

PASSED AND ADOPTED by the City Council of the City of Morro Bay at a regular meeting thereof held on the 22nd day of November 2022 by the following vote:

AYES:
NOES:
ABSENT:
ABSTAIN:
RECUSE:

_____
JOHN HEADDING, Mayor

ATTEST:

_____
DANA SWANSON, City Clerk

This Page Intentionally Left Blank

AGENDA NO: A-5
MEETING DATE: November 22, 2022

Staff Report

TO: **Honorable Mayor and City Council** **DATE: November 7, 2022**

FROM: **Greg Kwolek, Public Works Director**
Janeen Burlingame, Management Analyst

SUBJECT: **Adoption of Resolution No. 97-22 Approving Amendment No. 4 to the Morro Bay Transit and Trolley Operations and Management Agreement with MV Transportation, Inc.**

RECOMMENDATION

Staff recommends the City Council adopt Resolution No. 97-22 approving Amendment No. 4 to the Morro Bay Transit and Trolley Operations and Management Agreement with MV Transportation, Inc.

FISCAL IMPACT

A one-year extension to the Morro Bay Transit and Trolley Operations and Management Agreement (Agreement) has no fiscal impact on the General Fund as transit and trolley services are paid for by the Transit Fund.

The increase in the compensation rate for the monthly management fixed fee is not known at this time as it will be based upon 80% of the annual percentage difference in the Consumers Price Index (CPI) All Urban Los Angeles-Long Beach-Anaheim for December 2022. Compensation for the vehicle service hour fee during the extension period would increase by up to $10/vehicle service hour as budget allows. Both increases would be paid for with Transportation Development Act (TDA) funds received from the State for transit operations.

DISCUSSION

The City and MV Transportation, Inc. (MV) entered into an agreement effective January 1, 2015 for MV to provide year-round deviated fixed route transit and seasonal trolley services for the City. The Agreement was extended one-year through December 31, 2020 and later amended again for an additional two one-year periods (Amendments 2 and 3 in 2020 and 2021) through December 31, 2022 while responding to the Coronavirus (COVID-19) global pandemic.

The City is in the early stages of developing Request for Proposals (RFP) specifications for Morro Bay Transit and Trolley operations and day-to-day management services to release and award by the City Council during 2023 for an effective date of January 1, 2024.

Additionally, driver recruitment has become very difficult not only in Morro Bay, or in the County of San Luis Obispo, but across the transit industry nationally, with many transit agencies having to cut back on service levels resulting from a lack of driver availability to cover all shifts. Due to the uncertainty when this situation may improve, and to be competitive with other transit agencies, both the City and MV staff agree increasing the driver wage scale could help with driver recruitment going forward.

CONCLUSION

Staff recommends the City Council adopt Resolution No. 97-22 approving Amendment No. 4 to the Morro Bay Transit and Trolley Operations and Management Agreement with MV Transportation, Inc.

Prepared By: __JB ___	**Dept Review: __GK_____**
City Manager Review: SC_	**City Attorney Review: _LNL**

ATTACHMENTS

1. Resolution No. 97-22 with Amendment 4 to the Morro Bay Transit and Trolly Operations and Management Agreement

Prepared By: J Burlingame	Dept Review:_____
City Manager Review: _____	City Attorney Review: LNL

RESOLUTION NO. 97-22

**RESOLUTION OF THE CITY COUNCIL
OF THE CITY OF MORRO BAY, CALIFORNIA
APPROVING FOURTH AMENDMENT TO MORRO BAY TRANSIT AND TROLLEY
OPERATIONS AND MANAGEMENT AGREEMENT WITH MV TRANSPORTATION, INC.**

**T H E C I T Y C O U N C I L
City of Morro Bay, California**

WHEREAS, effective January 1, 2015, the City of Morro Bay (City) and MV Transportation Inc. (MV) entered into an agreement for MV to provide year-round deviated fixed route and seasonal trolley services for City (the "Agreement"); and

WHEREAS, pursuant to Section 2.2 of the Agreement, the term was extended one-year through December 31, 2020 (Amendment No. 1); and

WHEREAS, City and MV amended the Agreement for an additional two one-year periods through December 31, 2022 while responding to the Coronavirus (COVID-19) global pandemic (Amendment 2 and Amendment 3); and

WHEREAS, the Agreement and Amendment No. 1, No. 2, and No. 3 are hereinafter referred to as the "Amended Agreement;" and

WHEREAS, City and MV now agree it is time to extend the Amended Agreement for one-year while the City develops Request for Proposal specifications for release and award by the City Council during 2023 for Morro Bay Transit and Trolley operations and day to day management; and

WHEREAS, during the pandemic, driver recruitment has become very difficult across the transit industry, including in San Luis Obispo County, with many transit agencies having to cut back on some service due to a lack of drivers available to drive; and

WHEREAS, it is uncertain when this situation may improve and to be more competitive with other transit agencies City and MV agree increasing the driver wage scale could help with driver recruitment by increasing vehicle service hour fee during the extension period by up to $10/vehicle service hour as budget allows.

NOW THEREFORE BE IT RESOLVED, by the City Council of the City of Morro Bay approval of the Fourth Amendment to the Amended Agreement, attached hereto.

PASSED AND ADOPTED by the City Council of the City of Morro Bay at a regular meeting thereof held on the 22nd day of November 2022 by the following vote:

AYES:
NOES:
ABSENT:
ABSTAIN:
RECUSE:

_____
JOHN HEADDING, Mayor

ATTEST:

_____
DANA SWANSON, City Clerk

CITY OF MORRO BAY
AMENDMENT NO. 4 TO THE AGREEMENT FOR
MORRO BAY TRANSIT AND TROLLEY
OPERATIONS AND MANAGEMENT

This Amendment No. 4 is entered into on the 22nd day of November 2022, by and between the City of Morro Bay, a municipal corporation ("City") and MV Transportation Inc., a California corporation ("Contractor").

RECITALS

A. City and Contractor entered into an agreement as of January 1, 2015 for Contractor to provide year-round deviated fixed route and seasonal trolley services for City (the "Agreement").

B. Pursuant to Section 2.2 of the Agreement, the term was extended one-year through December 31, 2020 (Amendment No. 1).

C. City and Contractor amended the Agreement for an additional two one-year periods through December 31, 2022 while responding to the Coronavirus (COVID-19) global pandemic (Amendment 2 and Amendment 3).

D. WHEREAS, the Agreement and Amendment No. 1, No. 2, and No. 3 are hereinafter referred to as the "Amended Agreement."

E. City and Contractor now agree it is time to extend the Amended Agreement for one-year while the City develops Request for Proposal specifications for release and award by the City Council during 2023 for Morro Bay Transit and Trolley operations and day to day management.

F. During the pandemic, driver recruitment has become very difficult across the transit industry, including in San Luis Obispo County, with many transit agencies having to cut back on some service due to a lack of driver availability.

G. It is uncertain when this situation may improve and to be more competitive with other transit agencies City and Contractor agree increasing the driver wage scale could help with driver recruitment.

NOW, THEREFORE, City and Contractor mutually agree to amend the Amended Agreement as follows:

1. The term of the Amended Agreement is extended by one-year, effective January 1, 2023 through December 31, 2023.

2. The Vehicle Service Hour compensation rate applicable for calendar year 2023 shall be established at $10.00 per vehicle service hour.

3. The Monthly Management Fee applicable for calendar year 2023 shall be established based upon eighty (80%) of the annual percentage difference in Consumer Price Index (CPI) for All Urban Consumers Los Angeles-Long Beach-Anaheim CUURS49ASA0 for December 2022.

4. Except as expressly set forth in this Amendment, the terms and conditions in the Amended Agreement shall remain in full force and effect.

IN WITNESS WHEREOF, the parties hereto have caused this Amendment No. 4 to be executed by their duly authorized representatives as of the Effective Date.

CITY OF MORRO BAY

By: _____
John Headding, Mayor

Attest:

_____
Dana Swanson, City Clerk

MV TRANSPORTATION, INC.

By:_____

This Page Intentionally Left Blank

AGENDA NO: A-6

MEETING DATE: November 22, 2022

Staff Report

TO: **Honorable Mayor and City Council** **DATE: November 16, 2022**

FROM: **Gregory Kwolek, Public Works Director**
Damaris Hanson, Utilities Division Manager

SUBJECT: **Adopt Resolution No. 98-22 approving the 2019 IRWM Plan and Adopt Resolution No. 99-22 Accepting Integrated Regional Water Management (IRWM) Grant Funding for the Indirect Potable Reuse Component of the WRF Program**

RECOMMENDATION

Staff recommends the City Council to adopt Resolution No. 98-22 (Attachment 1) approving the 2019 San Luis Obispo County Integrated Regional Water Management (IRWM) Plan and adopt Resolution No. 99-22 (Attachment 2) authorizing staff to submit a grant application and accept a grant award of $1,200,000 from the San Luis Obispo County Flood Control and Water Conservation District (District) for the Indirect Potable Reuse component of the Morro Bay WRF Program.

FISCAL IMPACT

The City's proportional cost share for consultant services to support the District's IRWM Grant Application is estimated to be less than $10,000. There is adequate funding in the WRF Program Budget already approved by Council to support the City's share of consultant services. Accepting this grant will reduce the overall costs of the IPR component of the WRF Program.

BACKGROUND/DISCUSSION

In 2012, the City of Morro Bay approved the San Luis Obispo County Region IRWM Program Participants Memorandum of Understanding that outlined the structure for water planning for San Luis Obispo County and formed the Regional Water Management Group (RWMG). In November of 2014, Proposition 1 was approved by the voters of California which made available $510 million in funding for the IRWM Program.

On September 1, 2022, the San Luis Obispo County RWMG Working Group recommended the City's project, along with five other regional projects, receive funding through Proposition 1 Round 2 IRWM Implementation Grant Program administered by the California State Department of Water Resources (DWR). The recommendation included a grant award recommendation of $1,200,000 to fund a portion of the City's Indirect Potable Reuse component of the WRF Program. Referred by the project name for the grant "Indirect Potable Reuse," this component of the WRF Program will provide the City with a new, local, drought-proof and resilient water supply source, thereby diversifying the City's water portfolio and providing the necessary protection against climate change drought impacts, natural disasters and infrastructure failures.

The Working Group's grant award recommendation was then approved by the RWMG, the Water Resources Advisory Committee (WRAC) and, ultimately, the District Board of Supervisors on November 1, 2022. With the Board of Supervisor's approval, the District will be preparing a Prop 1 Round 2 IRWM Implementation Grant application for DWR that includes requesting funding the City's

Prepared By: ___DH__ _ **Dept Review: __GK___**

City Manager Review: _SC_____ **City Attorney Review: ___LNL____**

project in the amount of $1,200,000, which is the final step in the grant award process. For the City's project to be included in the District's IRWM Grant Application and to be eligible for the IRWM Grant funding, the City must adopt the following two resolutions.

Resolution to approve the 2019 IRWM Plan
This resolution (Attachment 1) approves the 2019 IRWM Plan and finds that the Plan is exempt from Section 21000 et seq. of the California Public Resources Code (CEQA). The 2019 IRWM Plan can be accessed at:
https://www.slocounty.ca.gov/Departments/Public-Works/Forms-Documents/Committees-Programs/Integrated-Regional-Water-Management-(IRWM)/IRWM-Plan/2019-IRWM-Plan.aspx

Resolution for IRWM Grant Funding for the Indirect Potable Reuse Component of the WRF Program
This resolution (Attachment 2) authorizes the submittal of the IRWM Grant Application and for funding the City's proportionate share (less than $10,000) of the District's IRWM consultant to develop the grant application.

ATTACHMENTS

1. Resolution No. 98-22 Adopting the 2019 San Luis Obispo County Integrated Regional Water Management Plan and find that the Plan is exempt from Section 21000 et seq. of the California Public Resources Code (CEQA)
2. Resolution No. 99-22 Accepting Integrated Regional Water Management Grant Funding for the Indirect Potable Reuse component of the WRF Program

RESOLUTION NO. 98-22

**RESOLUTION OF THE CITY COUNCIL
OF THE CITY OF MORRO BAY, CALIFORNIA
ADOPTING THE 2019 SAN LUIS OBISPO COUNTY
INTEGRATED REGIONAL WATER MANAGEMENT PLAN AND
FINDING THAT THE PLAN IS EXEMPT FROM SECTION 21000 ET SEQ.
OF THE CALIFORNIA PUBLIC RESOURCES CODE (CEQA)**

**The City Council
City of Morro Bay, California**

WHEREAS, the State of California has established an Integrated Regional Water Management grant program pursuant to the Water Quality, Supply, and Infrastructure Improvement Act of 2014 (Water Code Section 79700 *et seq.)* (also known as "Proposition 1"); and

WHEREAS, a Memorandum of Understanding (Attachment "1"), which has been signed by the agencies listed in Attachment "2" and who constitute the Regional Water Management Group for the San Luis Obispo County Region as of the date of this Resolution, designates the San Luis Obispo County Flood Control and Water Conservation District as the lead agency responsible for plan development and adoption but also provides for the adoption of the plan by each member of the Regional Water Management Group; and

WHEREAS, the concepts, direction and approach to water resources management embodied in the State's Integrated Regional Water Management program guidelines closely match those of the City of Morro Bay; and

WHEREAS, previous versions of / updates to the San Luis Obispo County Integrated Regional Water Management Plan were developed and adopted by multiple agencies in the County, including the City of Morro Bay, in coordination with the San Luis Obispo County Flood Control and Water Conservation District, in 2005, 2007 and 2014 prior to development of the version known as 2019 San Luis Obispo County Integrated Regional Water Management Plan; and

WHEREAS, the updates reflected in the 2019 San Luis Obispo County Integrated Regional Water Management Plan are needed in order to effectively and efficiently integrate the region's water resources management planning objectives and implementation strategies in the following five key areas: Water Supply, Groundwater Monitoring and Management, Flood Management, Ecosystems and Watershed, and Water Resources Management and Communications; and

WHEREAS, similar to prior versions, the 2019 San Luis Obispo County Integrated Regional Water Management Plan has been developed in coordination with the Regional Water Management Group and in accordance with current (2016) State standards; and

WHEREAS, the 2019 San Luis Obispo County Integrated Regional Water Management Plan identifies goals, objectives, strategies and projects designed to improve regional water supply reliability,

water recycling, water conservation, water quality improvement, stormwater capture and management, flood management, recreation and access, wetland enhancement and creation, and environmental and habitat protection and improvement; and

WHEREAS, the 2019 San Luis Obispo County Integrated Regional Water Management Plan is not subject to the requirements of the California Environmental Quality Act (CEQA) (Public Resources Code Section 21000 *et seq.*) because it involves only a planning study, as defined in Section 15262 of the State CEQA Guidelines.

NOW, THEREFORE, BE IT RESOLVED AND ORDERED by the City Council of the City of Morro Bay, that:

1. The 2019 San Luis Obispo County Integrated Regional Water Management Plan for the San Luis Obispo County Region is hereby adopted, and the Staff, of the City of Morro Bay is hereby authorized and directed to implement actions consistent with updating the Plan on a five-year cycle as described within the Plan.

2. Adoption of the 2019 San Luis Obispo County Integrated Regional Water Management Plan for the San Luis Obispo County Region is exempt from the California Environmental Quality Act (CEQA) pursuant to Section 15252 of the State CEQA Guidelines because the Plan consists of a planning study which identifies potential projects and policies for possible future actions subject to future approval.

PASSED AND ADOPTED by the Morro Bay City Council at a regular meeting thereof held on the 22nd day of November 2022 by the following vote:

AYES:
NOES:
ABSENT:
ABSTAIN:
RECUSE:

_____
JOHN HEADDING, Mayor

ATTEST:

_____
DANA SWANSON, City Clerk

San Luis Obispo County Region
Integrated Regional Water Management Program Participants
Memorandum of Understanding

The undersigned agencies and organizations hereby agree as follows:

1. BACKGROUND

The State of California has established an Integrated Regional Water Management (IRWM) planning and grant program pursuant to the Safe Drinking Water, Water Quality and Supply, Flood Control, River and Coastal Protection Bond Act of 2006 (Public Resource Code (PRC) Section 75001 et seq., also known as Proposition 84). This program is anticipated to be perpetuated and/or modified by future Bond acts. The IRWM program provides guidance for collaborative efforts to manage all aspects of water resources in a region by crossing jurisdictional, watershed, and political boundaries to involve multiple agencies, stakeholders, individuals, and groups in order to address issues and differing perspectives of all entities involved through mutually beneficial solutions. Regions that develop IRWM plans in accordance with the guidelines are eligible for certain water resources grant funding opportunities.

In accordance with PRC Section 75001 (et seq.) and State IRWM Program guidelines, a Memorandum of Understanding (MOU) (dated 2009), signed by eleven agencies within San Luis Obispo County, established a Regional Water Management Group (RWMG) for the San Luis Obispo County IRWM Region, and the San Luis Obispo County IRWM Region was officially accepted by the State in May 2009.

The San Luis Obispo County IRWM Region water resources stakeholders have determined the need to update the IRWM MOU in order to meet new State IRWM guidelines, to clarify the governance structure for IRWM planning in the San Luis Obispo County IRWM Region, and encourage broader participation. This MOU, in conjunction with the current IRWM Plan, sets forth the San Luis Obispo County IRWM Region's governance structure thereby allowing members and other stakeholders to understand how to participate in the IRWM Plan development and implementation.

2. PURPOSE, GOALS, AND APPROACH

2.1 Purpose. The purpose of this MEMORANDUM OF UNDERSTANDING (MOU) is to establish the mutual understandings among the San Luis Obispo County Region participants with respect to their joint efforts to develop and implement an Integrated Regional Water Management (IRWM) Plan for the San Luis Obispo County Region, including the definition of common IRWM terms, roles and responsibilities of IRWM Program Participants, and decision-making processes.

2.2 Goals. The goal of the IRWM program is to provide a reliable, long-term, and high-quality water supply, and to establish a unified vision among the participants' goals for water quality improvement, ecosystem preservation, water supply protection and enhancement, ground water management and flood management, in the context of social justice and climate change adaptation, while protecting the environment. The adopted IRWM plan will identify major water-related goals, objectives and conflicts within the region, consider a broad variety of water management strategies, identify the appropriate mix of water demand and supply management alternatives, water quality protections, flood management strategies, and environmental stewardship actions.

2.3 Approach. The San Luis Obispo County Region participants are specifying their shared intent to coordinate and collaborate on water management issues, giving consideration to disadvantaged communities and Native American tribes and their water related needs. In order to

enhance participation of stakeholders, it will be necessary to work at a sub-regional level to better understand the water resources needs and priorities throughout the region. When applying for grants, the San Luis Obispo County Region will strive to distribute the grant funding request fairly across the geographic region. The goal is to distribute awarded funding from each grant cycle equally across the sub-regions (i.e. one quarter of the overall funding to benefit each of the three sub-regions' projects/programs and one quarter of the overall funding to benefit regional projects/programs), to the extent feasible.

3. DEFINITIONS

3.1 Integrated Regional Water Management Plan (Plan). A comprehensive plan for a defined geographic area which shall satisfy the requirements of California's IRWM Program.

3.2 San Luis Obispo County Region (Region). The geographic area of San Luis Obispo County, which is coterminous with the San Luis Obispo County Flood Control and Water Conservation District (District) boundary.

3.3 Local Agency. Any city, county, city and county, special district, joint powers authority, or other political subdivision of the state, a public utility as defined in Section 216 of the Public Utilities Code, or a mutual water company as defined in Section 2725 of the Public Utilities Code.

3.4 Program Participants. Development and implementation of the Region's Plan is a collaborative effort undertaken by the Region's participants, as further discussed in Section 4. The effort is being led by the District, in partnership with the Regional Water Management Group, Water Resources Advisory Committee, Implementation Affiliates, and Interested Stakeholders. Only regional projects and programs to be implemented by those agencies which have adopted the Plan will be eligible for grant applications. The Region categorizes IRWM Program Participants into the following:

3.4.1 Regional Water Management Group (RWMG). A group in which three or more local agencies, at least two of which have statutory authority over water supply or water management, as well as those other persons who may be necessary for the development and implementation of the Plan, participate by means of this memorandum of understanding, in accordance with requirements of the California Water Code (CWC § 10539). The Region's RWMG members are signatories to this MOU, have adopted the current Plan, and may designate a representative to participate in RWMG activities and its Working Group. The entities must be either a Local Agency or an IRS 501(c)(3) nonprofit organization. The RWMG has the capacity to carry out projects (i.e. financial resources, management structure, adequate staffing). The agencies/organizations that form the RWMG may have planning or implementation projects eligible for State IRWM grants.

3.4.2 Water Resources Advisory Committee (WRAC). This is the committee comprised of water purveyor, resource conservation district, environmental and agricultural, and other water resources representatives that was originally established in the 1940s to advise the District Board of Supervisors on water resource issues. The WRAC is a Brown Act committee that meets monthly, with the exception of July and August. Many participants are actively engaged in issues relevant to Plan development and implementation, and will represent important stakeholder groups throughout the program.

3.4.3 RWMG Working Group (Working Group). The Working Group will involve representatives from the RWMG who have technical expertise and are able to work on the details associated with IRWM efforts. The Working Group will engage stakeholders at a sub-regional level in order to better understand the specific water resources needs and priorities of that sub-region.

3.4.4 Implementation Affiliates. These entities will adopt the Plan by resolution, but would not be signatories of the MOU. The entities must be either a Local Agency or an IRS 501(c)(3) nonprofit organization. The Implementation Affiliates have the capacity to carry out projects (i.e. financial resources, management structure, adequate staffing). In order to have a planning or implementation project eligible for State IRWM grants, agencies must be an Implementation Affiliate if they are not a part of the RWMG.

3.4.5 Interested Stakeholders. These individuals, organizations, and nonprofits (including those that are not IRS 501(c)(3) nonprofit organizations) who are interested in the IRWM program. The Interested Stakeholders may sign a letter of support for the Plan, or otherwise provide input to the RWMG, but would not be eligible for directly receiving State IRWM grant funds.

3.5 Sub-regions. The Region's IRWM program seeks to engage stakeholders and understand the water resources needs of the Region. To adequately ensure this balanced access and opportunity for participation in the IRWM program, the RWMG will utilize a sub-regional geographic structure, allowing more focused planning and local outreach efforts that are later brought into the context of the overall IRWM Region. These sub-regions have been deliberately defined in terms of logical planning and watershed/ hydrogeologic unit boundaries. These "sub-regions" include the North Coast, North County, and South County (see Attachment 1).

3.6 Regional Projects or Programs. Projects or programs to be implemented by the RWMG and/or Implementation Affiliates are identified in the Plan and are based upon the State's IRWM Guidelines under which the current Plan was adopted, which includes but is not limited to: reducing water demand through agricultural and urban water use efficiency, increasing water supplies for any beneficial use, improving operational efficiency and water supply reliability, improving water quality, improving resource stewardship, and improving flood management.

3.7 Integration. Assembling into one document the water-related management strategies, projects, programs, and plans of the Region. The development and implementation of the Plan should demonstrate the RWMG is forming, coordinating and integrating separate efforts in order to function as a unified effort in a collaborative manner that balances interests and engages a variety of stakeholders and seeks to efficiently integrate regional resources. The Plan development will identify water management strategies for the Region and the priority projects and programs that demonstrate how these strategies work together to meet goals identified in Section 2. It will also identify regional benefits of linkages between projects and plans that address different primary water-related objectives (for example, identifying regional benefits of linkages between a water supply project and a flood management project in the same watershed).

4. IRWM PROGRAM PARTICIPANTS

4.1 Program Participant Structure. Elements of the Plan will be developed and implemented by the Program Participants. The RWMG, including the District as the Lead Agency, and the Implementation Affiliates are responsible for Plan development and implementation.

4.2 Plan Development and Implementation. The Region's Plan that was adopted by the District, developed in coordination with and approved by stakeholders in 2005, and updated in 2007, will be the basis for subsequent adopted Plans for the Region. The Working Group will propose changes to the previous versions of the Plan to comply with new State guidelines and incorporate new information and projects. Since a key element of the IRWM Program is integration, the RWMG will work with Program Participants to identify water management strategies for the Region and sub-regions and the priority projects that demonstrate how these strategies work together to meet the purpose and goals in Section 2. How each Program

Participant contributes and participates in Plan development and implementation is described below:

4.2.1 Lead Agency. The District will act as the lead agency for Plan development, will execute this MOU, and will adopt the Plan in accordance with 4.3 and 4.4 below. The District will ultimately be responsible for the final production of the Region's Plan, hiring consultant(s) to develop the Plan, and presentations to stakeholders, submittal of IRWM grant applications, and execution and administration of grant agreements with the State. As the Lead Agency, the District will execute and administer agreements with RWMG members and Implementation Affiliates responsible for the implementation of projects that are awarded grants, including data collection relevant to grant agreements, project reporting, etc. Efforts described in Section 4.2.1 are subject to the availability of funding.

4.2.2 RWMG. Members will execute this MOU and adopt the Plan in accordance with 4.3 and 4.4 below. RWMG members will designate a representative with clear authority to represent the agency or organization, provide expertise, provide information in a timely manner, participate in meetings, review and approve technical documents as needed, and will provide the District with their designated representative's contact information. This representative will be eligible to participate on the Working Group. All RWMG members, whether or not their representative is participating in the Working Group, hereby agree to provide information sufficient to meet State guidelines for their regional projects and programs to be included in the Plan and participate in the review of the Plan. RWMG members will consider integrating projects and programs with other agencies when possible, especially with disadvantaged communities and Native American tribes, in accordance with State IRWM Guidelines. RWMG members responsible for the implementation of regional projects and programs awarded grant funding will be responsible, through contract with the District, for complying with the provisions of the District's grant agreement with the State. The RWMG will provide updates to the WRAC and seek WRAC support of recommendations at key decision points.

4.2.3 WRAC. The WRAC will provide a forum for public meetings/ workshops related to Plan development and implementation at key decision points. The WRAC will review and comment on the RWMG recommendations to the District's Board of Supervisors at key decision points.

4.2.4 Working Group. Representatives of the Working Group will be designated by the RWMG member and will have clear authority to represent the agency or organization, provide expertise, provide information in a timely manner, participate in meetings, review and approve technical documents as needed, and will provide the District with their designated representative's contact information. The District will provide materials with sufficient lead time for RWMG member and Working Group engagement. The Working Group will develop information, draft documents and recommendations pertaining to the Plan update consistent with current State IRWM Guidelines during Plan development. Efforts are anticipated to include stakeholder outreach, collection and incorporation of updated data, etc. The Working Group will develop information and recommendations for IRWM program planning and implementation, stakeholder outreach, and pursuit of funding opportunities. All RWMG members will participate in the process to select the Region's IRWM projects and programs for grant applications by way of the Working Group, who will conduct project/program solicitations and evaluations, and will make recommendations on grant funding allocations. The Working Group will need to conduct sub-regional public meetings during Plan development and implementation to facilitate stakeholder participation.

4.2.5 Implementation Affiliates. Implementation Affiliates shall adopt the Plan in accordance with Section 4.3. Implementation Affiliates will designate a representative with clear authority to represent the agency or organization, provide expertise, provide information in a timely manner, participate in meetings, review and approve technical documents as needed, and will provide the District with their designated representative's contact information. All

Implementation Affiliates will provide information sufficient to meet State guidelines for their regional projects and programs to be included in the Plan and participate in the review of the Plan and for implementation activities, such as project status updates, project reporting, data collection, etc. Implementation Affiliates will consider integrating projects and programs with neighboring agencies when possible, especially with disadvantaged communities and Native American tribes, in accordance with State IRWM Guidelines. Implementation Affiliates responsible for the implementation of regional projects and programs awarded grant funding will be responsible, through contract with the District, for complying with the provisions of the District's grant agreement with the State.

4.2.6 Interested Stakeholders. Interested Stakeholders may participate in the Plan development and implementation process by way of participation at WRAC and/or RWMG meetings. Interested Stakeholders that are not WRAC members will be notified when an IRWM program item will be reviewed by the WRAC if they request inclusion on the IRWM contact list (Section 5.6). Sub-regional meetings will be required to ensure Interested Stakeholders, including disadvantaged communities, who may not necessarily be able to attend WRAC meetings, can participate in Plan development and implementation.

4.3 IRWM Plan Adoption. Plan approval and adoption will be required of the governing bodies of RWMG members and Implementation Affiliates. Plan updates to meet new State guidelines, add new RWMG Members, add or remove and evaluate regional projects and programs, or other updates to information do not require Plan re-adoption. Significant changes to the Plan, including revised goals and objectives, revised methodologies (such as methodology for evaluating, ranking, and prioritizing projects and programs), revised regional boundaries, or other changes deemed significant by the RWMG and the Lead Agency, will require Plan re-adoption via the decision-making process described in Section 4.5.

4.4 Personnel and Financial Resources. It is expected that Program Participants will contribute the resources necessary to fulfill the responsibilities listed within Section 4 of this MOU. Program Participants that receive implementation grant funding, shall contribute a proportionate share of non-project costs associated with the grant agreement, based on awarded implementation funding (for example, contributing toward the cost of updating the Plan, should that be a condition of grant award)..

4.5 Decision Making. The RWMG shall develop IRWM program materials and will make recommendations to the Lead Agency at key decision points of the IRWM program. Written input will be sought between the representatives of RWMG members in the event the need for a decision arises that cannot be brought forth to the RWMG before a decision needs to be made. The District, by way of its Public Works Department, shall notify the RWMG agencies of recommendations being taken to the District's Board of Supervisors for action. The District's Board of Supervisors may approve, alter, or return any said recommendation of the RWMG. Furthermore, if the District's Board of Supervisors intends to alter an item or proposition approved by the RWMG, the District's Board of Supervisors shall set forth in writing its findings, after which the Board will hold a public hearing. The RWMG agencies shall have the right to appear and address the District's Board of Supervisors.

5. MUTUAL UNDERSTANDINGS

5.1 Need for the Region's IRWM Plan

5.1.1 To improve communication and cooperation between public and private agencies and minimize conflict-generated solutions.

5.1.2 To enhance our existing water management efforts by increasing stakeholder awareness of important issues, providing more opportunities for collaborative efforts and improving efficiencies in government and water management.

5.1.3 To qualify for state grants and other funding opportunities only available to those regions which have developed IRWM plans.

5.2 Subject matter scope of the IRWM Plan. The Plan focuses on water supply, water quality protection and improvement, ecosystem preservation and restoration, groundwater monitoring and management, and flood management as these are the most prevalent water resource issues facing the Region.

5.3 Geographical scope of the IRWM Program. The Region for this memorandum is coterminous with the boundary of San Luis Obispo County. This is an appropriate geographic region for integrated regional water management planning because it encompasses all aspects of water management generally within the same physical, political, environmental, social, and economic boundaries. The Region may engage stakeholders within the three sub-regions in order to better understand the specific water resources needs and priorities of that sub-region, which would then be incorporated into the context of the greater IRWM Region planning and implementation.

The Region is bordered by the Greater Monterey County IRWM region to the north, the Santa Barbara County and Watersheds Coalition of Ventura County IRWM regions to the south, and the Kern County IRWM region to the east.

Water resources issues that overlap neighboring regional boundaries are either covered by existing cooperative water management plans (i.e. Nacitone Watershed Management Plan), adjudication (i.e. Santa Maria Groundwater Basin), and operational agreements (i.e. Nacimiento Reservoir), or have no defining water resource management issue. All of these items are to be included in the Region's Plan consistent with the plans of neighboring regions. The RWMG will continue to coordinate with neighboring regions to address additional water resources issues and possible integrated water management strategies in our respective IRWM plans.

5.4 Non-binding nature. This document and participation in the IRWM program efforts are nonbinding, and in no way suggest that a RWMG member or Implementation Affiliate may not continue its own planning and undertake efforts to secure project funding from any source. An agency/ organization may withdraw from participation in accordance with Section 5.7.

5.5 Other on-going regional efforts. Development of the Plan is separate from efforts of other organizations to develop water-related plans on a regional basis. As the Plan is developed, work products can be shared with these separate efforts to provide them with current information.

5.6 Reports and communications. The WRAC, an IRWM contact list, and the District's website will serve as the forum for updates and correspondence relating to the IRWM program and Plan development.

5.7 Termination. Because the Plan will require periodic review and updating for use into the future, it is envisioned that the joint efforts of those involved will be ongoing in maintaining a living document. Thus this MOU will remain as a reflection of the understandings of the RWMG Members. As indicated, parties to this MOU may terminate their involvement at any time, but must provide all RWMG agencies with 30 days' advance notice of intent to terminate.

5.8 Superseded Prior MOU. This MOU supersedes the MOU dated April 21, 2009 (2009 MOU).

5.9 Counterparts. This MOU may be executed in counterparts and has the same force and effect as if all the signatures were obtained in one document.

6. SIGNATORIES TO THE MEMORANDUM OF UNDERSTANDING

We, the undersigned representatives of our respective agencies or organizations, acknowledge the above as our understanding of how the San Luis Integrated Regional Water Management Plan will be developed.

	signature
Rob Livick, PE/PLS	printed name
City of Morro Bay	agency
October 12, 2012	date

Attachment 1 – San Luis Obispo County IRWM Region and Sub-Regions Map

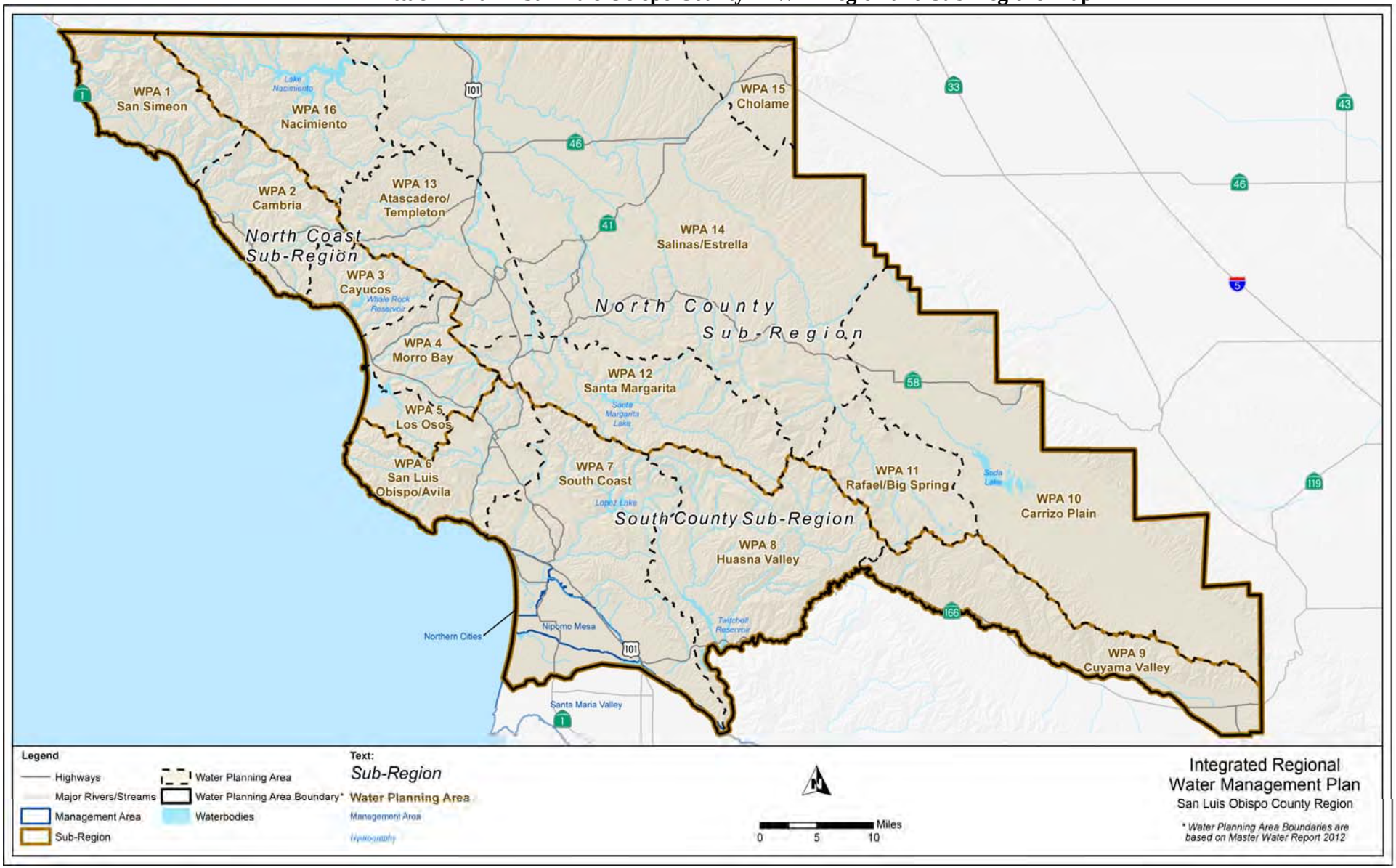

Attachment 2

Memorandum of Understanding Signatories for
San Luis Obispo County Region IRWM Participants

Agency or Organization
San Luis Obispo County Flood Control and Water Conservation District
County of San Luis Obispo
Avila Beach Community Services District
California Men's Colony
Cambria Community Services District
Central Coast Salmon Enhancement
City of Arroyo Grande
City of Grover Beach
City of Morro Bay
City of Paso Robles
City of Pismo Beach
City of San Luis Obispo
Coastal San Luis Resource Conservation District
Estrella-El Pomar-Creston Water District
Heritage Ranch Community Services District
The Land Conservancy of San Luis Obispo County
Los Osos Community Services District
Morro Bay National Estuary Program
Nipomo Community Services District
Oceano Community Services District
Templeton Community Services District
San Miguel Community Services District
San Miguelito Mutual Water Company
San Simeon Community Services District
Shandon-San Juan Water District
South San Luis Obispo County Sanitation District
S&T Mutual Water Company
Upper Salinas - Las Tablas Resource Conservation District

RESOLUTION NO. 99-22

**A RESOLUTION OF THE CITY COUNCIL
OF THE CITY OF MORRO BAY, CALIFORNIA
ACCEPTING INTEGRATED REGIONAL WATER MANAGEMENT GRANT FUNDING
FOR THE INDIRECT POTABLE REUSE COMPONENT OF THE
WATER RECLAMATION FACILITY (WRF) PROGRAM**

**The City Council
City of Morro Bay, California**

WHEREAS, the City participates in the Integrated Regional Water Management (IRWM) Program and Regional Water Management Group; and

WHEREAS, the City Council approved the "San Luis Obispo County Region Integrated Regional Water Management Program Participants Memorandum of Understanding" outlining the governance structure for the integrated water management planning efforts for San Luis Obispo County and the City Engineer executed the Memorandum in October 2012; and

WHEREAS, on November 4, 2014, California voters approved Proposition 1, the Water Quality, Supply, and Infrastructure Improvement Act of 2014. Proposition 1 authorized $510 million in Integrated Regional Water Management (IRWM) funding; and

WHEREAS, the City is implementing the Indirect Potable Reuse Component of the Water Reclamation Facility (WRF) Program, creating a new water supply- ultimately creating a sustainable, well diversified water supply portfolio; and

WHEREAS, the City has completed the construction of the water treatment facility, and has started to prepare a design for the injection wells; and

WHEREAS, the City, through the IRWM, was recommended to apply for a Proposition 1 implementation grant to fund portions of the Indirect Potable Reuse component of the WRF Program; and

WHEREAS, the City's Indirect Potable Reuse project, and five other County projects, were recommended for Proposition 1 implementation grant funding; and

WHEREAS, the San Luis Obispo County Flood Control and Water Conservation District is the lead agency responsible for the IRWM program and for the administration of agreements necessary to receive State funding; and

WHEREAS, the City wishes to submit an application and accept the grant funding for the Indirect Potable Reuse component of the WRF Program in the amount of $1,200,000.00.

NOW, THEREFORE, BE IT RESOLVED AND ORDERED by the City Council of the City of Morro Bay, that:

1. That the City is authorized to submit an application to the California Department of Water Resources to obtain a Round 2 Integrated Regional Water Management Implementation Grant pursuant to the Water Quality, Supply, and Infrastructure Improvement Act of 2014 (Water Code § 79700 et seq.), and
2. That, if awarded, the City Manager is authorized to enter into an agreement to receive a grant for the Indirect Potable Reuse Project; and
3. The Director of Public Works, or designee, is hereby authorized and designated to prepare the necessary data, conduct investigations, file such proposal, and execute a grant agreement with California Department of Water Resources and any other documents necessary to implement the City's application for and award of the grant funding; and
4. The Director of Public Works, or designee, is hereby authorized and designated to represent the City of Morro Bay in carrying out City of Morro Bay's responsibilities under the funding agreement, including certifying invoices and disbursement requests for Project costs on behalf of City of Morro Bay and compliance with applicable state and federal laws.
5. Any and all actions, whether previously or subsequently taken by City of Morro Bay, which are consistent with the intent and purposes of the foregoing resolution, shall be, and hereby are, in all respects, ratified, approved and confirmed.

PASSED AND ADOPTED by the Morro Bay City Council at a regular meeting thereof held on the 22nd day of November 2022 by the following vote:

AYES:
NOES:
ABSENT:
ABSTAIN:
RECUSE:

_____
JOHN HEADDING, Mayor

ATTEST:

_____
DANA SWANSON, City Clerk

This Page Intentionally Left Blank

AGENDA NO: A-7
MEETING DATE: November 22, 2022

Staff Report

TO: **Honorable Mayor and City Council** **DATE: November 16, 2022**

FROM: **Gregory Kwolek – Public Works Director**

SUBJECT: **Approve and Authorize Staff to Submit an Application for a Coastal Conservancy Grant for the Coleman Park Cultural and Historical Improvements Project**

RECOMMENDATION

Staff recommends the City Council adopt Resolution No. 100-22 approving and authorizing staff to submit an application for a Coastal Conservancy Grant for the Coleman Park Cultural and Historical Improvements Project.

ALTERNATIVE

The City Council may opt to not authorize staff to submit the Coastal Conservancy Grant application and provide other direction to staff.

FISCAL IMPACT

If awarded a Coastal Conservancy Grant, the City will be responsible for maintaining any facilities funded through the grant for 20 years. The fiscal impacts of this maintenance are expected to be negligible as parks maintenance staff already maintain Coleman Park. Further, the City would be expected to fully fund the Coleman Park Cultural and Historical Improvements project to completion. At this time, staff expects the current grant and local funds available to be sufficient to complete the project if awarded the Coastal Conservancy Grant.

BACKGROUND

The improvement of Coleman Park was identified by staff as a priority in 2021 because of its favorable existing elements and its proximity to other major City attractions. The park already draws local and regional visitors who enjoy its swing sets, picnic tables, and barbeque pits, and it sits at the crossroads between three of Morro Bay's best-known attractions: the Embarcadero, Morro Rock, and Morro Rock Beach. Unfortunately, parts of Coleman Park stand in disrepair. Currently, much of the park is comprised of unimproved, unvegetated decomposed granite, which is used as makeshift parking lots. These factors, combined with the abovementioned favorable elements of the park, present an opportunity for a variety of improvements. Because of this, City Council took interest in improving the Coleman Park area since at least 2008.

To better understand what specific improvements and features at Coleman Park the City should focus on, staff held two community meetings in the fall of 2021 to elicit suggestions from community members. To do this, staff invited members of the City Council, the Public

Prepared By: ___ GK_____	**Dept Review: __ GK__**
City Manager Review: __SC__	**City Attorney Review: ___LNL__**

Works Advisory Board, the Recreation and Parks Commission, the Harbor Advisory Board, Planning Commission, as well as representatives from the Chamber of Commerce, Visit Morro Bay, and a variety of local community, wildlife, and environmental organizations. Further, a community event flyer was distributed on social media. The event flyer indicated an option to send improvement ideas to staff over email for interested community members who could not attend the meetings.

The first community meeting was held at 10:00 a.m. on Tuesday, October 19, 2021, and brought approximately 30 attendees. The second was held on Thursday October 20, 2021, at 5:30 p.m. in the evening to allow working families to attend. This meeting had approximately 15 attendees present. The attendees were diverse in age and shared different perspectives based on age and intended use. A variety of park improvement ideas were received by staff, such as inclusion of:

- Family friendly exercise stations and amenities
- Natural (i.e., not traditional plastic) playgrounds for children
- Stage/concert space
- Natural and native gardens
- Picnic Tables
- Historical monuments
- Cultural and education interpretive signage and plaques
- Art component and/or sculptures
- Improved accessibility
- BBQ or Fire Pits

Staff also brought these suggested amenities to the Public Works Advisory Board and the City Council, who were supportive. Based on these discussions, the City Council provided direction to staff to apply for State Prop 68 funding through the Rural Recreation and Tourism (RRT) Program on January 11, 2022, to fund amenity improvements at Coleman Park.

The City was awarded $600,000 of grant funds for the RRT Program for Coleman Park improvements in August 2022. Staff believes this grant award, along with the State's Per Capita Program funding ($177,000) and use of Deferred Maintenance Funds ($31,500), Castle Winds Community Benefits Agreement Funds ($40,000), and Park in Lieu Fees ($69,500) will be sufficient to cover the costs of several of the amenities, including a new, accessible restroom at Coleman Park. Despite this, the overall park improvements project requires additional funding, specifically for inclusion of cultural and historical amenities.

DISCUSSION

City staff was recently presented with a new grant opportunity through the Coastal Conservancy to fund cultural and historical amenities and improvements in Coleman Park. A major component of this grant funding would involve the City collaborating with cultural and Native American tribal groups to plan, design, and construct cultural spaces such as monuments and other permanent experiential and educational installations to educate visitors on the cultural heritage of local tribes and cultural groups and to allow for these spaces to be used as meaningful meeting spaces for the groups participating. This collaboration could involve working with multiple groups on separate sites within the park, and would require the City to serve in project management and administrator/coordinator

roles with the cultural and tribal groups. Per the requirements of the Coastal Conservancy grant program, the City would notify tribes of the availability of sites within the park for installations and would be required to work with interested tribes. An exact framework for how the cultural groups and tribes would participate is yet to be developed, but participating groups would be expected to have a high degree of latitude in design decisions for cultural and historical amenities in specifically designated areas of the park.

In conversations with staff at the Coastal Commission, the City learned that projects in the Coleman Park area will likely require substantial efforts to restore natural and native habitat to area. Habitat restoration work would be included in the scope of work in the Coastal Conservancy grant application. Further, staff plans to align design of amenities with the surrounding landscape and the look and feel of the Harborwalk area to the extent possible while holding projects to a high standard aesthetically.

While the City does not yet have a project budget for improvements to be paid for through the Coastal Conservancy Grant, staff anticipates requesting $750,000 to $1,500,000 in the grant application to fund project management; planning, design, and construction of cultural and historical amenities; other eligible unfunded park amenities; and habitat restoration of the Coleman Park area.

If awarded, staff will bring design recommendations before any improvements are built to the Public Works Advisory Board, Recreation and Parks Commission, and the City Council. Stakeholders, including cultural and tribal groups, local environmental organizations, and other stakeholders will be invited to these public meetings.

ATTACHMENT

1. Resolution No. 100-22 approving the grant of funds from the State Coastal Conservancy for the Coleman Park Cultural and Historical Improvements project.

RESOLUTION NO. 100-22

**A RESOLUTION OF THE CITY COUNCIL
OF THE CITY OF MORRO BAY, CALIFORNIA
APPROVING THE GRANT OF FUNDS FROM THE STATE COASTAL CONSERVANCY FOR THE COLEMAN PARK CULTURAL AND HISTORICAL IMPROVEMENTS PROJECT**

**T H E C I T Y C O U N C I L
City of Morro Bay, California**

WHEREAS, the Legislature of the State of California has established the State Coastal Conservancy ("Conservancy") under Division 21 of the California Public Resources Code, and has authorized the Conservancy to award grants to public agencies and nonprofit organizations to implement the provisions of Division 21; and

WHEREAS, the Conservancy awards grants for projects that it determines are consistent with Division 21 of the Public Resources Code and with the Conservancy's Strategic Plan and that best achieve the Conservancy's statutory objectives, in light of limited funding.

WHEREAS, the City of Morro Bay ("applicant") intends to apply for Conservancy grant funding for Coleman Park Cultural and Historical Improvements ("the project").

WHEREAS, the Conservancy encourages applicants for grant funding to certify through a resolution the applicant's approval of the application at the time of submission of an application to the Conservancy for an award of grant funds.

NOW, THEREFORE, BE IT RESOLVED by the City Council of the City of Morro Bay, California,

1. Approves the filing of an application for funding by the Conservancy.

2. Has or will have sufficient funds to complete and, following completion, to operate and maintain any property acquired under the project or to operate and maintain any facilities funded as part of the project for a reasonable period, not less than the useful life of the facilities.

3. Agrees to provide any funds beyond the Conservancy grant funds necessary to complete the project.

4. Authorizes any person holding any of the following positions with the applicant to act as a representative of the applicant and to negotiate and execute on behalf of the grantee all agreements and instruments necessary to comply with the Conservancy's grant requirements, including, without limitation, the grant agreement: City Manager, Public Works Director.

PASSED AND ADOPTED by the City Council of the City of Morro Bay, California, at a regular meeting held on the 22nd day of November 2022.

AYES:
NOES:
ABSENT:
ABSTAIN:
RECUSE:

_____
JOHN HEADDING, Mayor

ATTEST:

_____
DANA SWANSON, City Clerk

I, Dana Swanson, City Clerk for the City of Morro Bay, hereby certifies that the above Resolution No. 100-22 was duly adopted by the Morro Bay City Council at its regular meeting held November 22, 2022, by the following roll call vote:

AYES:
NOES:
ABSENT:
ABSTAIN:
RECUSE:

This Page Intentionally Left Blank

AGENDA NO:	**A-8**
MEETING DATE:	**November 22, 2022**

Staff Report

TO: **Honorable Mayor and City Council** **DATE: November 16, 2022**

FROM: **Gregory Kwolek, Public Works Director**
Erin DeAngelis, Engineering Intern

SUBJECT: **Adopt Resolution No, 101-22 To Approve Participation In Regional Desalination Executable Solution And Logistics (Desal) Plan Evaluation**

RECOMMENDATION

Staff recommends the City Council adopt Resolution No. 101-22 approving City participation in the Desalination Executable Solution and Logistics (DESAL) Plan evaluation.

FISCAL IMPACT

There is no fiscal impact to the City for participation in the Regional DESAL Plan evaluation. Participation in the evaluation is no cost to the City, nor is there a commitment to participate in a desalination project.

BACKGROUND/ DISCUSSION

In response to concerns about anticipated long-term water supply challenges in the region, staff from the San Luis Obispo County Flood Control and Water Conservation District (District) recently began discussions with water purveyors throughout San Luis Obispo County to explore a collaborative, regional approach to developing a local, sustainable water source through desalination. At their October 18, 2022, meeting, the San Luis Obispo County Board of Supervisors passed a resolution to authorize District staff to proceed with developing a DESAL Plan in coordination with other participating water-purveying agencies and stakeholders. The resolution also authorized the Director of Public Works, or designee, to pursue grants to offset project costs and return to the Board of Supervisors for grant award approval. District staff are now requesting water purveyors, including Morro Bay, to participate in an initial evaluation of the development of a DESAL Plan and the potential for such a regional project.

The District has acknowledged a desalination project will take a long time to plan for, permit, and construct. County staff has coordinated with the Countywide Water Action Team (CWAT), an informal working group of staff from water utilities across the County with water supply planning responsibilities, to develop a five-phase approach, shown below, to developing a DESAL Plan and project:

Prepared By: _ED_ **Dept Review: _GK__**

City Manager: _____SC____ **City Attorney: ___LNL_____**

Phase 1: DESAL Plan Agreement Phase
• District Board of Supervisors direction to proceed on path to desalination • Get resolutions from agencies agreeing to be evaluated in DESAL Plan (today's recommended action) • Develop and vet scope of work with participating agencies (Winter '22/Spring '23) • Establish stakeholder and public engagement process (implement through all phases) • Seek/pursue grant opportunities (continue through all phases) • Review scope of work/engagement process with the Board/direction to proceed (Summer '23)
Phase 2: DESAL Plan Development Phase
• District procure consultant • Implement public engagement process • Identify project concept alternatives, vet, and analyze • Rank and select preferred project
Phase 3: Project Development Agreement Phase
• Commitment from project partners to pay for and proceed with project development and all efforts necessary to get to construction phase
Phase 4: Project Development Phase
• Detailed project design, permits and environmental processes, operations and distribution plans, right of way negotiations, water supply and Governance Agreement negotiations, Financing plan
Phase 5: Project Governance Agreement and Construction Phase
• Execute Governance agreement for construction and ongoing maintenance

The initial phase of the DESAL Plan evaluation will be completed at no cost to the City of Morro Bay or any other participating water-purveyor and requires no future commitment to participate in the planning, design, or construction of desalination infrastructure. Staff from the District have recommended the City's involvement in the initial evaluation for the DESAL Plan to ensure the City's eligibility to participate in a future infrastructure project. Lack of participation in this phase would likely mean ineligibility to participate in later phases should the City wish to do so in the future.

The City has an important role in ensuring adequate water supply and acknowledges the need to develop new, reliable sources to accommodate climate change and provide a reliable, resilient water supply for the region. Since 1992, the City has received approximately 85 percent of its total water supply from the State Water Project with the remaining coming from groundwater from the Morro Valley Basin. Delivery of State Water is reliant upon precipitation in Northern California and the Sierra Nevada mountains and hundreds of miles of aqueduct and pipelines to convey the water to the Central Coast. The City of Morro Bay's OneWater Plan, approved by City Council in 2018, was developed in part to address concerns about its heavy reliance on a single water source and the long-term reliability of imported water in the face of sustained droughts and emergency disruptions, such as earthquakes. The recycled water or Indirect Potable Reuse (IPR) components of the Water Reclamation Facility (WRF) Program will play an integral role in providing the City a local, resilient source of water in the near term. However, it is important to continue to evaluate and participate in regional water supply efforts to evaluate future water supplies. Desalination could provide a potential additional local water supply that is drought-proof, resilient, and scalable in the long-term.

On November 16, 2022, staff presented information about the DESAL Plan to the Public Works Advisory Board, who unanimously passed a motion in support of the City's participation in the DESAL Plan and recommend the City Council approve the resolution approving this participation.

ATTACHMENTS

1. Resolution No. 101-22 Approving Participation in the DESAL Plan
2. DESAL Plan Timeline

RESOLUTION NO. 101-22

**RESOLUTION OF THE CITY COUNCIL
OF THE CITY OF MORRO BAY, CALIFORNIA,
APPROVING PARTICIPATION IN THE
DESALINATION EXECUTABLE SOLUTION AND LOGISTICS (DESAL) PLAN**

THE CITY COUNCIL
City of Morro Bay, California

WHEREAS, adequate water for the people, economy and environment in San Luis Obispo County is needed in perpetuity; and

WHEREAS, conflicts surrounding use of the limited existing water supplies are increasing, including limitations on groundwater use and transfers, limitations on surface water diversion and State policies that lead to water system consolidation mandates; and

WHEREAS, water use efficiency practices, low impact development, stormwater capture and recycled water have been implemented to help extend the limited water supplies but are insufficient to overcome long term shortages and cannot be relied upon to sustainably meet future additional needs and maintain a reasonable quality of life; and

WHEREAS, despite conservation efforts which have reduced per capita consumption from 231 gallons per day to 146 gallons per day over the last 25 years[1], the County remains highly vulnerable to water shortages due to its isolated location and dependence on rainfall; and

WHEREAS, the future reliability of existing water supplies and infrastructure that depend on rainfall, such as groundwater and surface water reservoirs and streams, is uncertain due to changing hydrologic patterns, land use, environmental regulations, population growth and aging infrastructure; and

WHEREAS, water-purveying agencies, including the City of Morro Bay, are best positioned to develop and utilize water supply projects that will reduce dependence on groundwater and surface water and can thereby relieve competition with individual well owners and the environment for those water supplies; and

WHEREAS, due to proximity to the ocean, and future water supply quantity, quality and reliability needs, the 2019 San Luis Obispo County Integrated Regional Water Management Plan and 2012 Countywide Master Water Report identify desalination as a water resource management strategy to pursue; and

WHEREAS, while desalination can provide a local, reliable, and sustainable water supply for decades to come, desalination projects take a long time to plan for, permit and construct; and

[1] https://www.ppic.org/publication/water-use-in-california/

WHEREAS, the San Luis Obispo County Flood Control and Water Conservation District intends to develop the DESAL Plan over the next several years via a public process that, when complete, will ultimately contain balanced recommendations related to responsibly advancing the implementation of a regional desalination project that will benefit the people, economy and environment in the County; and

WHEREAS, the San Luis Obispo County Flood Control and Water Conservation District will be the lead agency and contract administrator for the DESAL Plan and is requesting that water-purveying agencies that wish to be evaluated during the development of the DESAL Plan adopt resolutions approving participation.

NOW, THEREFORE, THE CITY COUNCIL OF THE CITY OF MORRO BAY, CALIFORNIA, DOES HEREBY RESOLVE, DECLARE, DETERMINE AND ORDER AS FOLLOWS:

SECTION 1. The City of Morro Bay wishes to be included in the development of the DESAL Plan and to be evaluated as a potential partner in such a regional desalination project in the future in order to inform our decision makers and constituents.

SECTION 2. The Public Works Director, or designee, of the City of Morro Bay is hereby authorized and directed to participate in the development of the DESAL Plan, and to bring forward related recommendations.

PASSED AND ADOPTED by the City Council of the City of Morro Bay at a regular meeting thereof held on the 22nd day of November 2022 by the following vote:

AYES:
NOES:
ABSENT:
ABSTAIN:
RECUSE:

_____
JOHN HEADDING, Mayor

ATTEST:

_____
DANA SWANSON, City Clerk

Desalination Executable Solution And Logistics Plan

DESAL Plan*

2: DESAL Plan Development Phase

- Procure consultant (May – Winter '24)
- Begin to implement public engagement process (Winter '24)
- Concept alternatives identification, vetting & analysis (Spring '24 – Summer '26)
- Ranking & selection of preferred project (Summer '26 – Fall '28)

4: Project Development Phase

- Detailed Design, Permits/Env Processes, Operations & Distribution Plans, Right of Way negotiations, water supply & Governance Agrmt negotiations, Financing Plan

2022 | 2023 | 2024 | 2025 | 2026 | 2027 | 2028 | 2029 | 2030 | 2031 | ... | 2040 | 2041 | ... | 2045

(initial go/no go)

1: DESAL Plan Agrmt Phase

- District Board direction to proceed on path to desal (Oct '22)
- Resolutions from agencies agreeing to be evaluated in DESAL Plan (Fall '22)
- Develop & vet scope of work (Winter '22 – Spring '23)
- Establish stakeholder & public engagement process (establish/refine through all phases)
- Begin seeking/pursuing grant opportunities (continue through all phases)

(Interim go/no go)

3: Project Development **Agrmt Phase

- Commitment from project partners to pay for & proceed w/ project development
- **Agreement covers all activities needed to get to construction phase

(Final go/no go)

5: Project Governance Agrmt & Construction Phase

- Execute Governance Agrmt for construction & ongoing operation

*End dates of Phases 2-5 are less certain

AGENDA NO: B-1

MEETING DATE: November 22, 2022

Staff Report

TO: **Honorable Mayor and City Council** **DATE: November 14, 2022**

FROM: **Scot Graham, Community Development Director**

SUBJECT: **Adoption of Ordinance No. 655 Repealing and Reenacting Multiple Chapters of Title 14 (Buildings and Construction) of the City of Morro Bay Municipal Code, incorporating the 2022 California Building Standards Code, as adopted by the State of California, and local modifications thereto**

RECOMMENDATION

Staff recommends the City Council adopt, by second reading and by title only with further reading waived, of Ordinance No. 655 "An Ordinance of the City Council of the City of Morro Bay, California, repealing, amending and reenacting Chapters 14.01-14.12 of Title 14 (Buildings and Construction) of the Morro Bay Municipal Code, thereby adopting by reference and amending the 2022 California Building (Volumes 1 and 2), Residential, Electrical, Mechanical, Plumbing, Energy, Historical Building, Fire, Existing Building, Green Building, Administrative, And Reference Standards Codes, the 2021 International Property Maintenance Code, and the 1997 Uniform Code for the Abatement of Dangerous Buildings."

ALTERNATIVES

Staff does not recommend any alternatives to adopting Ordinance No. 655 for the Building Code Update.

FISCAL IMPACT

None. The ordinance does not modify any of the City of Morro Bay adopted permit or impact fees.

BACKGROUND/DISCUSSION

Ordinance No. 655 was introduced for first reading at the October 25, 2022, City Council meeting. For additional information regarding the 2022 California Building Code update please see the October 25, 2022, City Council staff report (Item B-2) at the following link: http://ca-morrobay2.civicplus.com/ArchiveCenter/ViewFile/Item/6012

The 2022 California Building and Standards Code will become effective statewide on January 1, 2023. Adoption of Ordinance No. 655 will also allow the City's local amendments to become effective on January 1, 2023.

ENVIRONMENTAL REVIEW

The proposed action is exempt from the requirement of the California Environmental Quality Act (CEQA) in that is not a Project which has the potential for causing effect on the environment under Title 14 of the California Code of Regulations, Section 15061(b)(3). No further environmental review is required.

Prepared By: _SG_____ Dept Review: _____

City Manager Review: ___SC_____ City Attorney Review: __LNL_

PUBLIC NOTICE

Notice of this public hearing was published in the San Luis Obispo Tribune newspaper on November 11, 2022 and posted in the public notice kiosks at City Hall, the Community Development Department, and the Moro Bay Public Library.

A public hearing notice is not typically required for a second reading of an ordinance; however, building codes adopted by reference are subject to special statutory rules, specifically CA Government Code Sections 50022.3 and 50022.4, requiring a public hearing be held for the second reading.

CONCLUSION

Staff recommends the City Council adopt, by second reading and by title only with further reading waived, of Ordinance No. 655 "An Ordinance of the City Council of the City of Morro Bay, California, repealing, amending and reenacting Chapters 14.01-14.12 of Title 14 (Buildings and Construction) of the Morro Bay Municipal Code, thereby adopting by reference and amending the 2022 California Building (Volumes 1 and 2), Residential, Electrical, Mechanical, Plumbing, Energy, Historical Building, Fire, Existing Building, Green Building, Administrative, And Reference Standards Codes, the 2021 International Property Maintenance Code, and the 1997 Uniform Code for the Abatement of Dangerous Buildings."

ATTACHMENT

1. Ordinance No. 655

AGENDA NO: B-1

MEETING DATE: November 22, 2022

ORDINANCE NO. 655

AN ORDINANCE OF THE CITY COUNCIL OF THE CITY OF MORRO BAY, CALIFORNIA, REPEALING, AMENDING AND REENACTING CHAPTERS 14.01-14.12 OF TITLE 14 (BUILDINGS AND CONSTRUCTION) OF THE MORRO BAY MUNICIPAL CODE, THEREBY ADOPTING BY REFERENCE AND AMENDING THE 2022 CALIFORNIA BUILDING (VOLUMES 1 AND 2), RESIDENTIAL, ELECTRICAL, MECHANICAL, PLUMBING, ENERGY, HISTORICAL BUILDING, FIRE, EXISTING BUILDING, GREEN BUILDING, ADMINISTRATIVE, AND REFERENCE STANDARDS CODES, THE 2021 INTERNATIONAL PROPERTY MAINTENANCE CODE, AND THE 1997 UNIFORM CODE FOR THE ABATEMENT OF DANGEROUS BUILDINGS

THE CITY COUNCIL
CITY OF MORRO BAY, CALIFORNIA

WHEREAS, there are certain state and model codes relating to buildings, construction fire and life safety as follows:

A. 2022 California Building Code (volumes 1 and 2)
B. 2022 California Residential Code
C. 2022 California Electrical Code
D. 2022 California Mechanical Code
E. 2022 California Plumbing Code
F. 2022 California Energy Code
G. 2022 California Historical Building Code
H. 2022 California Fire Code
I. 2022 California Existing Building Code
J. 2022 California Green Building Standards Code
K. 2022 California Administrative Code
L. 2022 California Referenced Standards Code
M. 2021 International Property Maintenance Code
N. 1997 Uniform Code for the Abatement of Dangerous Buildings

WHEREAS, Government Code § 50022.1, et seq. and Health and Safety Code § 17922 authorize the City to adopt by reference the California Building Standards Code as provided in Titles 24 and 25 of the California Code of Regulations and other codes, including, without limitation, the 2021 International Property Maintenance Code and, the 1997 Uniform Code for the Abatement of Dangerous Buildings; and

WHEREAS, pursuant to Health and Safety Code § 17950 and 18938(b), the California Building Standards Code is applicable to all occupancies throughout the State of California, whether or not the City takes affirmative action to adopt the California Building Standards Code; and

WHEREAS, Health and Safety Code § 17960, requires a local building department to enforce State Housing Law, the California Building Standards Code, and the implementing regulations of the Department of Housing and Community Development for residential structures; and

WHEREAS, Health and Safety Code § 17958.5 allows the City to make those changes or modifications to the requirements contained in the provisions published in the California Building Standards Code as it determines, pursuant to the provisions of Health and Safety Code § 17958.7, are reasonably necessary because of local climatic, geological, or topographical conditions; and

WHEREAS, pursuant to the immediately foregoing Health and Safety Code sections and Health and Safety Code § 18941.5, certain express findings have been made and are as follows:

FINDINGS

1. The topographic, underlying geologic and surface soil conditions of the hillsides of the City of Morro Bay are of a gradient and composition such that movement has historically been known to occur. Soils testing has revealed the presence of potentially hazardous geologic conditions, including expansive soils, questionable soils, soils prone to liquefaction and seasonally high ground-water. Therefore, it is reasonably necessary to adopt regulations for grading operations that are more detailed and restrictive than those adopted by the State of California and codified in the California Building Standards Code.

2. Due to topographic and geologic conditions, development in Morro Bay has historically been constrained such that building occurred predominantly in the flatter areas, a scarcity of which resulted in the creation of small lots and the construction of structures in relative close proximity to one-another. Those conditions are known to be conducive to the spread of fire and, therefore, it is reasonably necessary to adopt standards more restrictive than those adopted by the State of California and codified in the California Building Standards Code and California Fire Code for the installation of automatic fire sprinklers on new and existing buildings, limiting the use of wood shakes or shingles, and to otherwise establish construction and fire prevention regulations more restrictive than those adopted by the State of California and codified in the California Building Standards Code to reduce and minimize the potential for loss of and damage to life and property resulting from fire, hazardous materials, explosions and to protect firefighters and emergency personnel during emergency operations. More particularly, this finding supports the modification of California Building Code, California Fire Code, California Residential Code and California Electrical Code.

3. Due to topographic conditions and in order to protect the estuarine environment of and adjacent to the City of Morro Bay, it is reasonably necessary to adopt regulations more

restrictive than those adopted by the State of California and codified in the California Building Standards Code, creating more stringent thresholds for when a building permit is required for construction of sidewalks, driveways, decks, paving, or flatwork, prohibiting the construction of private sewage disposal systems and requiring the installation of sewer backwater valves. More particularly, this finding supports the modification of California Building Code Section 105.2, California Plumbing Code section 713.0, and the addition of Plumbing Code section 709.5.

NOW, THEREFORE, THE CITY COUNCIL OF THE CITY OF MORRO BAY, CALIFORNIA FINDS AND ORDAINS AS FOLLOWS:

SECTION 1. The City Council hereby declares and adopts the foregoing recitals and findings as true and correct and they are incorporated herein.

SECTION 2. Effective January 1, 2023, Chapters 14.01-14.12 of the Morro Bay Municipal Code are hereby repealed and reenacted to read as follows (with redline changes below to show amendments made):

Chapter 14.01

GENERAL

Sections:

14.01.010 Title and Purpose.
14.01.020 Adoption of Codes.
14.01.030 Building Official and Fire Chief Designated.

14.01.010 Title and Purpose.

This title shall be known and may be cited as "The Buildings and Construction Ordinance of the City of Morro Bay," Title 14 of the Morro Bay Municipal Code (MBMC). These regulations are hereby established and adopted to protect and promote public health, safety and welfare. This title establishes minimum regulations for construction, fire prevention, and the use and occupancy of buildings and other structures. This title prescribes regulations and standards that are consistent with the State Housing Law of California.

14.01.020 Adoption of Codes.

Fourteen documents, one each of which are on file in office of the Building Official, identified by the seal of the City of Morro Bay, marked and designated as the:

A. 2022 California Building Code (volumes 1 and 2),

B. 2022 California Residential Code,
C. 2022 California Electrical Code,
D. 2022 California Mechanical Code,
E. 2022 California Plumbing Code,
F. 2022 California Energy Code,
G. 2022 California Historical Building Code,
H. 2022 California Fire Code,
I. 2022 California Existing Building Code,
J. 2022 California Green Building Standards Code,
K. 2022 California Administrative Code
L. 2022 California Referenced Standards Code
M. 2021 International Property Maintenance Code,
N. 1997 Uniform Code for the Abatement of Dangerous Buildings, published by the International Conference of Building Officials;

are hereby adopted, including chapters and sections not otherwise adopted by agencies of the State of California, and the appendices thereto as the buildings, construction, and fire prevention regulations of the City of Morro Bay. The provisions of the above-mentioned are hereby referred to, adopted, and made a part hereof as if fully set out in this title except as modified hereinafter.

14.01.030 Building Official and Fire Chief Designated.

The City's community development director is hereby designated as the Building Official and Building Code Official for the City of Morro Bay. The Fire Chief is hereby designated as the Fire Code Official for the City of Morro Bay. Where the "authority having jurisdiction" is used in the adopted codes, it shall mean the Building Official or the Fire Chief, as applicable.

Chapter 14.02

ADMINISTRATION AND ENFORCEMENT

Sections:

14.02.010 Administration and Enforcement.
14.02.020 Modification of Division II of Chapter 1 of the California Building Code.

14.02.010 Administration and Enforcement.

The Administration and Enforcement of this title shall be in accordance with Division II of Chapter 1 of the California Building Code as adopted, modified, amended, and supplemented herein.

14.02.020 Modifications of Division II of Chapter 1 of the California Building Code.

The California Building Code, adopted in Section 14.01.020, is hereby modified, amended, and supplemented as follows:

A. Amend Section 103.1 to read as follows:

103.1 Creation of Enforcement Agency. The Building Division of the Community Development Department of the City of Morro Bay is hereby created and the official in charge thereof shall be known as the Building Official. Where reference is made to the Authority Having Jurisdiction or Code Official in the adopted Codes, it shall mean the Building Official.

B. Add Section 104.8.2 to read as follows:

104.8.1 Liability or Responsibility due to Error or Omission. This title shall not be construed so as to impose upon the City, or upon any of its officials or employees, any liability or responsibility for injury or damage resulting from any work approved or performed with respect to this title, or by reason of any inspection performed hereunder. No person shall be relieved of the responsibility of compliance with this title because of an error or omission made by a city official or employee.

C. Add Section 104.9.2 to read as follows:

104.9.2 Cargo Containers, Rail Cars, and Vehicle Bodies. Any person who intends to bring into the City or otherwise use, alter or relocate within the City any cargo container, streetcar, boxcar, refrigerator car, motorbus body or similar vehicle body for the purpose of use or occupancy, shall first make application to the Building Official and obtain the required permit. The application shall demonstrate the proposed use, occupancy, structure, construction, and alteration will conform to the provisions of this title.

D. Amend Section 109.2 to read as follows:

109.2 Schedule of permit fees. Permit fees shall be as prescribed in the City's Master Fee Schedule.

E. Amend Section 113 to read as follows:

SECTION 113
BOARD OF APPEALS

113.1 General. In order to hear and decide appeals of orders, decisions or determinations made by the Building Official relative to the application and interpretation of the technical provisions this code, there shall be and is hereby created a board of appeals. The board of appeals shall be appointed by the City Council and hold office at its pleasure. The Building Official shall be an ex officio member and shall act as secretary to the board but shall have no vote upon any matter before the board. The board shall adopt rules of procedure for conducting its business.

The board of appeals shall also serve as the Local Appeals Board, Housing Appeals Board, and Accessibility Appeals Board, as defined in Health and Safety Code § 17920.5, 17920.6 and 19957.5.

113.2 Limitations on authority. An application for appeal shall be based on a claim the true intent of this code or the rules legally adopted thereunder have been incorrectly interpreted, the provisions of this code do not fully apply, or an equally good or better form of construction is proposed. The board shall have no authority to waive requirements of this code, nor shall the board have any authority relative to the administration of this code.

113.3 Qualifications. The board of appeals shall consist of five members who are qualified by experience and training to pass on matters pertaining to the appeal and are not employees of the City. Two members of the board of appeals shall be physically handicapped, two members shall be persons experienced in construction, and one member shall be a public member.

113.4 Appointment. Upon receipt by the Building Official, of a qualified application for appeal, the Building Official shall within 60 days, recommend to the City Council five persons who, based on their qualifications and experience, appear to be suited to hear and decide the appeal. Upon finding those individuals indeed appear to be qualified to hear and deciding the appeal, the City Council shall appoint those persons and they shall be known as the Board of Appeals and shall have the authority and be tasked with the duties thereof for the purposes of hearing and deciding that specific appeal.

F. Amend Section 114.4 to read as follows:

114.4 Violation Penalties. Any person who violates a provision of this code or fails to comply with any of the requirements thereof or who erects, constructs, alters, extends, repairs, moves, removes, demolishes or occupies any building, structure, or equipment in violation of the approved construction documents, a directive of the Building Official, or of a permit or certificate issued under the provisions of this

Code, shall be subject to fines and penalties as established in Title 1 of the MBMC, in addition to other penalties as prescribed by law.

Chapter 14.03

BUILDING CODE

14.03.010 Modifications of the California Building Code.

The California Building Code, adopted in Section 14.01.020, is hereby modified, amended, and supplemented as follows:

A. Adopt appendices H, I and J. Delete appendices A, B, C, D, E, F, G, K, L, M, N,O and P.

B. Amend section 1808.1 (Foundations) and adopt section 1808.1.1 which shall have the same force and effect as if printed here in its entirety and is hereby modified, amended, and supplemented as follows:

   1808.1.1 Foundation setback verification. Prior to the placement of concrete and upon completed form installation, a licensed surveyor is required to measure and record the distance from the proposed foundation walls to the established lot lines. The contractor shall submit these findings in letter format to the building inspector upon the request for a foundation inspection. Letter shall specify the findings of front, sides and rear yard setbacks as defined in Title 17 of the MBMC.

C. Amend section 2304.8.2 (Structural Roof Sheathing) and adopt section 2304.8.2.1 which shall have the same force and effect as if printed here in its entirety and is hereby modified, amended, and supplemented as follows:

   2304.8.2.1 Building height verification. Prior to roof sheathing or shear wall inspection, a licensed surveyor is required to measure and record the height of the structure. The contractor shall submit this finding in letter format to the building inspector upon the request for roof sheathing/shear wall inspection. Letter shall specify the recorded height of structure as defined in Title 17 of the MBMC.

D. Amend Appendix J section J103.1 (Permits Required) and adopt section J103.1.1 which shall have the same force and effect as if printed here in its entirety and is hereby modified, amended, and supplemented as follows:

   8. An excavation below finished grade for basements and footings of a building, retaining wall or other structure authorized by a valid building permit. This shall not

exempt any fill made with the material from such excavation or exempt any excavation having an unsupported height greater than 5 feet (1524 mm) after the completion of such structure.

9. An excavation that (1) is less than 2 feet (610 mm) in depth or (2) does not create a cut slope greater than 5 feet (1524 mm) in height and steeper than 1 unit vertical in 1 ½ units horizontal (66.7% slope).

10. A fill less than 1 foot (305 mm) in depth and placed on natural terrain with a slope flatter than 1 unit vertical in 5 units horizontal (20% slope), or less than 3 feet (914 mm) in depth, not intended to support structures, that does not exceed 50 cubic yards (38.3 m3) on any one lot and does not obstruct a drainage course.

Chapter 14.04

RESIDENTIAL CODE

14.04.010 Modifications of the California Residential Code.

The California Residential Code, adopted in Section 14.01.020, is hereby modified, amended, and supplemented as follows:

A. Delete Division II of Chapter 1. Administration and Enforcement of the Residential Code shall be as set forth in the California Building Code, as modified, amended and supplemented by Chapter 14.02 of this code. Fees shall be as prescribed in the City's Master Fee Schedule.

B. Adopt Appendices AH, AS, AT and AX. Delete Appendices AA, AB, AC, AD, AE, AF, AG, AI, AJ, AK, AL, AM, AN, AO, AP and AQ, AR, AV, AW, AX, AY, AZ.W.

C. Amend Section R313.1 and R313.2 to read as follows:

R313.1 Townhouse and One- and Two-family dwellings automatic fire sprinkler systems. An automatic residential fire sprinkler system shall be installed in all new townhouses and one and two family dwellings, and in all existing townhouses and one and two family dwellings where alteration results in an increase in floor area in excess of 50 percent, or 300 square feet. This section shall be applicable to mobile homes and factory-built housing not located in a mobile home or special occupancy park.

R313.2 Determination of Floor Area. For the purposes of this section, floor area shall be defined as the area within the exterior walls of the building under consideration. The floor area

of a building, or portion thereof, not provided with surrounding walls, shall include the usable area under the horizontal projection of the roof or floor above.

For the purposes of this section, buildings shall be considered separate when:

1. The fire separation distance as defined in CBC Sec. 705.5 is not less than that permitted in CBC Table 705.5 and 705.8 where unprotected openings are allowed in an exterior wall of a non-sprinklered building, or

2. The buildings are structurally independent, the adjoining walls are constructed of fire-resistant construction as prescribed in CBC Table 705.5 without openings or penetrations, projections comply with CBC Section 705.2, and parapets are constructed where required by CBC Section 705.11.

D. Add Section R313.3.3.5 to read as follows:

R313.3.3.5 Waterflow Alarm. A local waterflow alarm and remote inspector's test valve, installed in accordance with NFPA 13, shall be installed on all sprinkler systems.

E. Amend Section R105.2 (Work exempt from permit), No. 3, to read as follows:

3. Retaining walls that are not over 4 feet (1219 mm) in height measured from the bottom of the footing to the top of the wall, unless supporting a surcharge or a sloping backfill. Retaining walls supporting a surcharge or a sloping backfill exceeding 20%, require calculations and plans signed by a registered civil or structural engineer.

Chapter 14.05

ELECTRICAL CODE

14.05.010 Modifications of the California Electrical Code.

The California Electrical Code, adopted in Section 14.01.020, is hereby modified, amended, and/or supplemented as follows:

A. Delete annexes A, B, C, D, E, F, G, H, I, and J. Administration and Enforcement of the Electrical Code shall be as set forth in the California Building Code as modified, amended and supplemented by Chapter 14.02 of this code. Fees shall be as prescribed in the City's Master Fee Schedule.

B. Amend Article 230-70(A)(1) to read as follows:

230-70(A)(1) Readily Accessible Location. A service disconnecting means shall be installed at a readily accessible location either outside the building or structure, or inside nearest the point of entrance of the service conductors.

The disconnecting means shall be accessible to emergency personnel, either directly or by a remote actuating device, without requiring travel through the building interior.

Chapter 14.06

MECHANICAL CODE

14.06.010 Modifications of the California Mechanical Code.

The California Mechanical Code, adopted in Section 14.01.020, is hereby modified, amended, and/ or supplemented as follows:

A. Delete Division II of Chapter 1. Administration and Enforcement of the Mechanical Code shall be as set forth in the California Building Code as modified, amended and supplemented by Chapter 14.02 of this code. Fees shall be as prescribed in the City's Master Fee Schedule.

B. Adopt appendices A, B, C, D, E, F, G, and H.

Chapter 14.07

PLUMBING CODE

Sections:

14.07.010 Modifications of the California Plumbing Code
14.07.020 Retrofitting with water-saving devices required.
14.07.030 Required sewer backwater valve.

14.07.010 Modifications of the California Plumbing Code.

The California Plumbing Code, adopted in Section 14.01.020, is hereby modified, amended, and supplemented as follows:

A. Delete Division II of Chapter 1. Administration and Enforcement of the Plumbing Code shall be as set forth in the California Building Code as modified, amended and supplemented by Chapter 14.02 of this code. Fees shall be as prescribed in the City's Master Fee Schedule.

B. Adopt Appendix K . Delete appendices A, B, C, D, E, F, G, H, I, J, and L.

C. Amend Section 710.1 to read as follows:

710.1 A Backwater Valve, extended to and accessible from grade for maintenance, shall be installed on every Building Sewer.

Exception: In new construction, plumbing fixtures installed on a floor level that is above the next upstream manhole cover elevation shall not discharge through the required backwater valve.

D. Amend Section 713.0 to read as follows:

713.0 Sewer Required.

713.1 Every building in which plumbing fixtures are installed and every premises having drainage piping thereon shall have a connection directly to a public or private sewer.

713.2 Private Sewage Disposal Systems shall not be permitted.

14.07.020 Retrofitting with water-saving devices required.

A. Every property owner, prior to the sale or transfer of any real property upon which is located any structure connected to the city's water supply shall retrofit the structure with the water-saving devices required for new construction as set forth in this title. In cases where the Building Official determines the use of such fixtures in existing structures would fail to meet the requirements of the Plumbing Code, fixtures using the least amount of water which do meet the requirements of the Plumbing Code shall be utilized.

B. In cases where a buyer intends to demolish all structures on such property within ninety days from the date of transfer, the structure need not be retrofitted prior to transfer; provided a covenant and a bond are filed with the city as follows:

1. The property owner shall file with the city clerk a notarized covenant agreeing to either demolish all structures located on the property connected to the city water system, within ninety days from the date of transfer or to perform the retrofit required in subsection A of this section, together with a faithful performance bond, in a form satisfactory to the city in an amount equal to

one hundred and fifty percent of the full cost of retrofitting all such structures securing faithful performance of the agreement.

2. The agreement shall also authorize and grant the city permission to enter onto the property and to perform such retrofit in the event the property owner fails to do so. Further, the property owner shall agree to reimburse the city for all cost incurred by the City in the event the bond is insufficient.

C. Determination of compliance with the requirements of subsection A shall be made by the Building Official after an inspection performed by the Building Official or a qualified plumbing contractor under the supervision of the Building Official, who shall issue a certificate indicating same to the seller or title company involved. Seller shall pay the fee set forth in the Master Fee Schedule for such retrofit inspection at the time seller submits the request for the retrofit inspection. No property transfer shall be recorded until such certificate has been received by the seller and transferred with the title to the buyer. If noncompliance is found, the property owner (both seller and buyer) and any title company involved in the transfer shall be in violation of this code and subject to those penalties as prescribed in Title 1 of this code.

14.07.030 Required sewer backwater valve.

A. Any existing lateral sewer piping upon any premises which services fixtures whose elevation is lower than the elevation of the first upstream sewer manhole rim, lamp hole, or pump station receiving manhole, and for which the city has record of a previous sewage backflow incident involving a clogged sewer main shall be protected from backflow of sewage by installing backwater valves of a type approved by the Building Official. The property owner shall be required to provide and install such device.

B. If the property owner fails to install and maintain a backwater valve in good working condition when required under this section, then the Building Official may declare said sewer connection to be a nuisance and abate such nuisance pursuant to Section 8.12.010 et seq. of this code by installing an approved-type backwater valve at the owner's expense. Said property owner may, in addition, be subject to fines as outlined in subsection E of this section.

C. All house connection sewers, industrial sewers, private sewage disposal systems and appurtenances thereto, now existing, or hereafter constructed, shall be maintained by the owner of the property in a safe and sanitary condition and all devices or safeguards which are required by this section for the operation thereof shall also be maintained in a good working order by the owner. It shall be the property owner's responsibility to maintain that portion of the sewer to the public main, including the connection to the public main.

D. The Public Works Director, the health officer, and other duly authorized employees of the city and the health department bearing proper credentials and identification shall be permitted to enter all properties for the purposes of inspection, observation, measurement, sampling, and

testing in accordance with the provisions of this section. The Public Works Director, the health officer, or their representatives shall have no authority to inquire into any processes including metallurgical, chemical, oil, refining, ceramic, paper, or other industries beyond that point having a direct bearing on the kind and source of discharge to the sewers or waterways of facilities for waste treatment.

E. Violations and Penalties. Any person who is convicted of violation of any provisions of this section is guilty of an infraction punishable as provided in Chapter 1.16 of this code.

Chapter 14.08

FIRE CODE

Sections:

14.08.010. Purpose.
14.08.020. Bureau of fire prevention.
14.08.030. Fire district established.
14.08.040. Penalties for turning in false alarms.
14.08.050. Fire injury report.
14.08.060. Storage of gasoline driven vehicles.
14.08.070. Citation powers.
14.08.080. Fire Hazard Severity Zones
14.08.090. Modifications of the California Fire Code

14.08.010. Purpose.

This chapter shall be known and may be cited as "The Fire Prevention Regulations of the City of Morro Bay," Chapter 14.08 of Title 14 of the Morro Bay Municipal Code. This chapter prescribes minimum regulations to reduce and minimize the potential for loss of and damage to life and property resulting from fire, panic, hazardous materials, and explosions.

14.08.020. Bureau of fire prevention.

The California Fire Code shall be enforced by the fire department or building division of the Community Development Department under the supervision of the Fire Chief.

14.08.030. Fire district established.

The entire incorporated area of the city is declared to be and is established a fire district.

14.08.040. Penalties for turning in false alarms or for conviction of intentionally setting a fire.

Individuals responsible for turning in false alarms shall be responsible for the cost the fire department incurs while responding to the alarm. The cost of the false alarm shall be determined in accordance with the master fee schedule. The intent of this section is not to penalize those persons who make honest mistakes. Persons convicted of intentionally setting a fire in violation of any law or ordinance within the city limits shall pay the cost of fighting that respective fire.

14.08.050. Fire injury report.

Any physician, first aid station, ambulance company or persons who treat or aid any person injured by a fire, explosion or chemical burn within the City shall, within twenty-four hours, report such treatment and pertinent information to the fire department.

14.08.060. Storage of gasoline driven vehicles.

No one shall store, repair or use any motorcycle, moped or any other gasoline driven vehicle inside of any dwelling. Storage and repair of gasoline driven vehicles are permitted in garage areas adjacent to dwellings.

14.08.070. Citation powers.

The Morro Bay Fire Chief (Fire Chief), Fire Marshal and full-time safety members of the Fire Department authority to issue citations as provided in Title 1 of this code. Arson investigators who are full-time members of the Fire Department shall have the powers of a peace officer in performing their duties under this Code, and shall have the powers of a peace officer as provided in California Penal Code, Sections 830.37

14.08.080. Fire Hazard Severity Zones.

A. Purpose and Intent. The purpose of this chapter is to provide authority for the identification of local fire hazard severity zones and provide authority for enforcement of state and local codes in these zones. The intent of this chapter is to reduce the potential for fire losses by providing minimum requirements for the protection of properties constructed in very high hazard severity zones and other wildland/urban interface areas designated by the fire chief and supported by substantial evidence.

B. Designation-Recommendation. The Fire Chief is hereby authorized to designate very high fire hazard severity zones within one hundred twenty days of receiving recommendations from the California Department of Forestry and Fire Protection.

C. Designation-Not identified. The Fire Chief may designate areas not identified as very high fire hazard Severity Zones by the California Department of Forestry and Fire Protection following a finding supported by substantial evidence in the record that the requirements for very high fire hazard severity zones are necessary for effective fire protection within the area(s).

D. Designation-Declined. The Fire Chief may decline to designate areas identified by the California Department of Forestry and Fire Protection as Very high fire hazard severity zones following a finding, supported by substantial evidence in the record, the requirements for very high fire hazard severity zones are not necessary for effective fire protection with the area(s).

E. Supported by substantial evidence in the record. "Supported by substantial evidence in the record" shall require the City Council to hold a public hearing and make findings there is competent substantial evidence in the record to support the Fire Chief's designation as fire hazard areas.

F. Enforcement. The Building Official shall enforce the provisions of Chapter 7A of the California Building Code and Chapter 49 of the California Fire Code in all very high fire hazard severity zones and other areas designated by the Fire Chief and supported by substantial evidence in the record.

G. Permits. All submittals for subdivision, entitlement, or building permits shall demonstrate that the proposed project allows for compliance with the provisions of Government Code Section 51182 and Public Resource Code Section 4291, except where otherwise allowed by law, to the satisfaction of the Fire Chief and the Building Official.

14.08.090. Modifications of the California Fire Code.

The California Fire Code, adopted in Section 14.01.020, is hereby modified, amended, and/ or supplemented as follows:

A. Adopt Appendix Chapter 4 and appendices B, BB, C, CC, D, H, I, K, and N. Delete appendices A, E, F, G and J.

B. Section 101.1 is amended to read as follows:

Section 101.1 Title. These regulations shall be known as the Fire Code of the City of Morro Bay.

C. Section 103.1 is amended to read as follows:

Section 103.1 General. The Fire Department of the City of Morro Bay is hereby established and the person in charge thereof shall be known as the Fire Chief. Where the Code uses the term Fire Official, it shall mean the Fire Chief.

D. Section 113.2 is amended to read as follows:

113.2 Schedule of permit fees. Fees shall be paid in accordance with the City’s Master Fee Schedule.

E. Section 302.1, “Definitions,” is amended to add the following definition in correct alphabetical order:

SKY LANTERN. An airborne lantern typically made of paper with a wood frame containing a candle, fuel cell composed of waxy flammable material or other open flame which serves as a heat source to heat the air inside the lantern to cause it to lift into the air. Sky candles, fire balloons and airborne paper lanterns mean the same as sky lanterns.

F. Section 507.5.4 is amended to read as follows:

507.5.4 Obstruction. Unobstructed access to fire hydrants shall be maintained at all times. The fire department shall not be deterred or hindered from gaining immediate access to fire protection equipment or fire hydrants.

The Fire Chief shall have the authority to remove or cause to be removed, without notice, any vehicle, vessel, or object that is in violation of this section. The owner of said item, so removed, shall be responsible for all towing, storage, or other costs incurred therein.

G. Section 308.1.1.1 is added to read as follows:

308.1.1.1 Burning Prohibited. Open burning, bon fires, recreational fires, and all other outdoor fires are prohibited.

Exception:

Barbeques and portable outdoor fireplaces that conform with the following provision are allowed.

1. Fires shall be conducted at a safe distance from and in accordance with the applicable manufacturer’s instructions to prevent the spread of fire to a minimum of 15-feet from adjacent structures or other combustible materials.

2. Fire shall be contained in a non-combustible container, not to exceed 3 feet in diameter and 2 feet in height.

3. Fuel loading shall not exceed 3 feet in diameter or 2 feet in height.

4. Fire shall be fueled by propane, natural gas, charcoal, dried wood, commercial fire logs, or pellets. Fuels shall not include green waste, yard trimmings, pressure treated wood, trash, plastic, or other noxious or hazardous materials.

5. Ground fires, sub-surface or pit fires, and earth floored fire rings are prohibited.

6. If in the opinion of the Fire Chief or his or her designee, a fire is potentially hazardous or smoke is causing a nuisance, the fire shall be extinguished immediately.

H. Section 308.1.6.3 is amended to read as follows:

308.1.6.3 Sky Lanterns. The ignition and launching of sky lanterns is prohibited.

Exception: The ignition and launching of sky lanterns may be allowed, subject to the approval of a permit by the Chief, where it has been determined that adequate safeguards will be in place.

I. Section 511 is added to read as follows:

SECTION 511
FIRE SERVICE ELEVATOR

511.1 Elevator car to accommodate ambulance stretcher. Where elevators are provided, at least one elevator shall be provided for fire department emergency access to all floors. The elevator car shall be of such a size and arrangement to accommodate an ambulance stretcher 24 inches by 84 inches with not less than 5-inch radius corners, in the horizontal, open position and shall be identified by the international symbol for emergency medical services (star of life). The symbol shall not be less than 3 inches high and shall be placed inside on both sides of the hoistway door frame.

Exception: Elevators located within one- and two-family dwellings and townhouses.

J. Section 901.4.7 is added to read as follows:

901.4.7 Partial Sprinkling of Buildings. Partial sprinkling of buildings shall not be permitted, except where otherwise allowed by NFPA 13R, 13D, and Section 903.3.1.1.1.

K. Delete Sections 903.2 through 903.2.1.4 and 903.2.2 through 903.2.10.1.

L. Add Section 903.2 to read as follows:

903.2 Where Required. An approved automatic fire sprinkler system shall be installed throughout:

1. In all new buildings and structures with more than Zero (0) square feet regardless of type or use.
2. In all new buildings and structures with more than Zero (0) square feet regardless of type or use, on the west side of the Embarcadero road
3. In additions or alterations of floor area for all buildings or structures as follows:
   a. Throughout structures where additions to existing buildings and substantial remodels more than 50% of the existing floor area is in excess of 500 square feet;

   ALTERATION OF FLOOR AREA: "For the purpose of this definition, the following criteria shall be considered in determining the percentage of "alteration of floor area." The 50% referred to under "Substantial Remodel" applies to the entire building's gross floor area in plain view. The entire room or space where

the remodel is taking place will be considered in the calculation, either alone or in combination with any of the following:
a. Removing wall finishes and exposing framing of; Interior wall (where finishes are removed from one side only the room or space to which the framing is exposed will be included in the calculation). Perimeter exterior wall (one or both sides).
b. new wall construction, removing, or repositioning, either interior or perimeter exterior walls, the rooms, or spaces on both sides of the wall will be included in the calculation.
c. Removal of the ceiling in any room or space to expose rafters, trusses, beams, purlins, or floor joists.
d. Removal of the roof structure (only rooms or spaces that are directly below the removed roof structure will be included in the calculation).
e. Removal of floor finishes which exposes floor framing and/or removal of concrete
f. Relocating plumbing fixtures in a bathroom or kitchen will cause that entire room or space to be included in the calculation.
g. other alterations considered substantial by the Fire Code Official.

Exceptions:

a. group R-3 and U occupancies

903.2.1 Where Required. An approved automatic fire sprinkler system shall be installed throughout:

1. In all new R-3 and U occupancies private garages and carports accessory to:

a. Including all attached structures;

b. Including all structures within 10 feet.

2. In additions or alterations of floor area for all buildings or structures as follows:

a. Throughout structures where additions is in excess of 300 square feet and substantial remodels more than 50% of the existing floor area;

ALTERATION OF FLOOR AREA: "For the purpose of this definition, the following criteria shall be considered in determining the percentage of "alteration of floor area." The 50% referred to under "Substantial Remodel" applies to the entire building's gross floor area in plain view. The entire room or space where

the remodel is taking place will be considered in the calculation, either alone or in combination with any of the following:

a. Removing wall finishes and exposing framing of; Interior wall (where finishes are removed from one side only the room or space to which the framing is exposed will be included in the calculation). Perimeter exterior wall (one or both sides).

b. new wall construction, removing, or repositioning, either interior or perimeter exterior walls, the rooms, or spaces on both sides of the wall will be included in the calculation.

c. Removal of the ceiling in any room or space to expose rafters, trusses, beams, purlins, or floor joists.

d. Removal of the roof structure (only rooms or spaces that are directly below the removed roof structure will be included in the calculation).

e. Removal of floor finishes which exposes floor framing and/or removal of concrete

f. Relocating plumbing fixtures in a bathroom or kitchen will cause that entire room or space to be included in the calculation.

g. other alterations considered substantial by the Fire Code Official.

Exception:

Installation of an automatic fire sprinkler system shall not be required when, to the satisfaction of the Fire Chief and the Building Official, it is demonstrated the proposed construction, use, and occupancy are minor in scope and nature, the installation of an automatic fire sprinkler system would be impractical, and the intent and purpose of this section is otherwise met.

M. Amend Section 903.3.1.1 to read as follows:

903.3.1.1 NFPA 13 sprinkler systems. Where other provisions of this code require a building or portion thereof be equipped throughout with an automatic sprinkler system in accordance with this section, or where a building contains two or more occupancies or uses, sprinklers shall be installed throughout in accordance with NFPA 13 as amended in Chapter 47 except as provided in Section 903.3.1.1.1.

M. Section 3604.1 is amended to read as follows:

3604.1 General. Piers, marinas, docks, fuel docks, wharves and similar boat mooring facilities shall be equipped with fire protection equipment in accordance with Section 3604.1 through 3604.6 and as otherwise required by the Chief.

N. Section 5609 is added to read as follows:

SECTION 5609.1
SALE AND USE OF FIREWORKS

5609.1 Sale and Use of Fireworks Unlawful. The sale or use of fireworks, pyrotechnics, and others explosives shall be unlawful.

Exceptions:

1. The sale of fireworks, approved by the State Fire Marshal as "safe and sane," shall be permitted, subject to the approval of a permit by the Fire Chief.

2. The use of fireworks, approved by the State Fire Marshal as "safe and sane," shall be permitted on private property only.

3. Public fireworks displays may be allowed, subject to the approval of a permit by the Fire Chief.

4. Pyrotechnics for use in movie industry operations may be allowed, subject to the approval of a permit by the Fire Chief.

5. This section shall not apply to the sale and use of State Fire Marshal approved and listed party poppers and snap caps.

6. Any person violating this provision will be guilty of a misdemeanor and subject to a $1,000 fine for each offense.

7. Notwithstanding any other provision of this code, any Morro Bay Police Officer may issue an administrative citation for a first offense without first issuing a warning; and the administrative fine shall be $1,000 for each offense.

Chapter 14.09

EXISTING BUILDING CODE

14.09.010 Modifications of the California Existing Building Code

The California Existing Building Code, adopted in Section 14.01.020, is hereby modified, amended, and supplemented as follows and shall be the technical strengthening provisions for buildings subject to Chapter 14.18 of this title:

Amend Section 505.3 Replacement window emergency escape and rescue openings. to read as follows:

Where windows are required to provide emergency escape and rescue openings, replacement windows shall comply with the maximum sill height requirements of section R310.2.3 and the minimum opening area requirements of sections R310.2.1, and R310.2.2

Chapter 14.10

RESERVED

Chapter 14.11

HOUSING CODE

14.11.010 Modifications of the International Property Maintenance Code.

The 2021 International Property Maintenance Code, adopted in Section 14.01.020, shall have the full force and effect as if printed here in its entirety and is hereby modified, amended, and/ or supplemented as follows:

A. Amend Section 101 to read as follows:

SECTION 101.2.1-SCOPE

101.2.1 Where any building or portion thereof is used or intended to be used as a combination apartment house- hotel, the provisions of this code shall apply to the separate portions as if they were separate buildings.

101.2.2 Rooming houses, congregate residences or lodging houses shall comply with all requirements of this code for structures.

Chapter 14.12

DANGEROUS BUILDINGS CODE

14.12.010 Modifications of the Uniform Code for the Abatement of Dangerous Buildings.

The 1997 Uniform Code for the Abatement of Dangerous Buildings, adopted in Section 14.01.020, shall have the full force and effect as if printed here in its entirety and is hereby modified, amended, and/ or supplemented as follows:

A. Amend Section 103 to read as follows:

SECTION 103- ALTERATIONS, ADDITIONS AND REPAIRS

All buildings or structures which are required to be repaired under the provisions of this code shall be subject to the provisions of Chapter 34 of the Building Code.

B. Amend the following definitions, located in Section 301, to read as follows:

BUILDING CODE is the California Building Code, as adopted and amended by this title.

HOUSING CODE is the 1997 Uniform Housing Code, as adopted and amended by this title.

SECTION 3. This Ordinance shall take effect January 1, 2023. The City Clerk, or her duly appointed deputy, shall attest to the adoption of this Ordinance and shall cause this Ordinance to be published and posted in the manner required by law.

SECTION 4. If any section, subsection, sentence, clause, phrase, or portion of this Ordinance is, for any reason, held to be invalid or unconstitutional by the decision of any court of competent jurisdiction, such decision shall not affect the validity of the remaining portions of this Ordinance. The City Council hereby declares that it would have adopted this Ordinance and each section, subsection, sentence, clause, phrase, or portion thereof, irrespective of the fact that any one or more sections, subsections, sentences, clauses, phrases, or portions thereof may be declared invalid or unconstitutional.

INTRODUCED at a regular meeting of the City Council of Morro Bay, held on the 25th day of October 2022 by motion of Councilmember Addis and seconded by Councilmember Ford.

PASSED AND ADOPTED on the 22nd day of November 2022, by the following vote:

AYES:
NOES:
ABSENT:

_____
JOHN HEADDING, Mayor

ATTEST:

_____
DANA SWANSON, City Clerk

APPROVED AS TO FORM:

_____
CHRIS F. NEUMEYER, City Attorney

STATE OF CALIFORNIA)
COUNTY OF SAN LUIS OBISPO)
CITY OF MORRO BAY)

I, Dana Swanson, City Clerk of the City of Morro Bay, California, do hereby certify that the foregoing Ordinance No. 655 was duly passed and adopted by the City Council of the City of Morro Bay at the regular meeting thereof, held on the 22nd day of November 2022, by the following vote:

AYES:
NOES:
ABSENT:
ABSTAIN:

IN WITNESS WHEREOF I have hereunto set my hand and affixed the official seal of the City of Morro Bay, California, this ____ day of _____, 2022

_____
DANA SWANSON, City Clerk

This Page Intentionally Left Blank

AGENDA NO:	**C-1**
MEETING DATE:	**November 22, 2022**

Staff Report

TO: **Honorable Mayor and City Council** **DATE: November, 17, 2022**

FROM: **Greg Kwolek – Public Works Director**
Paul Amico, PE – Water Reclamation Facility (WRF) Program Manager

SUBJECT: **Approve WRF Contract Amendments and Review and Comment on Fiscal Year 22-23 Q1 WRF Quarterly Report**

RECOMMENDATION

Staff recommends the City Council review and provide input on the Fiscal Year 22-23 1st Quarter (Q1) WRF Quarterly Report and authorize the City Manager to execute the following Water Reclamation Facility (WRF) contract amendments:

1. Amendment No. 6 to the agreement with Anvil Builders, Inc. (Anvil) for the WRF Lift Stations and Offsite Pipelines construction for $646,763, which results in a total not to exceed contract value for Anvil of $34,843,344;
2. Amendment No. 8 to the agreement with Filanc, Black & Veatch (FBV) for the Water Reclamation Facility Construction project for $957,418 which increases the Guaranteed Maximum Price (GMP) to $78,015,298; and
3. Amendment No. 3 to the agreement with Cogstone Resource Management (Cogstone) for cultural resources monitoring services during construction of the WRF Lift Station and Offsite Pipelines for a total amount of $97,535.90, resulting in a total not to exceed amount of $1,493,527.12.

FISCAL IMPACT

Anvil Builders, inc.

The PCOs included in Amendment No. 6 are listed in the following table. If the amendment is approved, then the total not to exceed amount for the Anvil Agreement will increase from $34,196,581 to $34,843,344.

Prepared By: ___AC_____	**Dept Review: ___GK___**
City Manager Review: ___SC_____	**City Attorney Review: ___JP____**

PCO #	DESCRIPTION	Amount
26	Relocate 12" City RO Waterline at Sta 87+00	$130,452
31	Existing Storm Drains Collapse at Sta 63+97	$7,389
35	Existing RO Brine Line Discharge to WRF Outfall	$200,000
36	DDW-Initiated Realignments between Sta 99 and Sta 116	$82,892
37	Restoration of Quintana Rd Near Kings Ave	$13,000
45	Atascadero BR and Joint Trench Realignments	$34,023
53	PS-B Grading and Drainage Revisions	$65,102
55	200 LF Fused 4" HDPE for City Emergency Leak Response	$1,338
57	Add FCA Restraint Rods and Lugs at Pump Stations	$47,647
58	Change Wet Well Piping Fit-up Bolts to 316SS (RFI 122)	$9,963
59	PS-A Retaining Wall Revision to Detail 1	$20,837
68	Waterline Breaks on Atascadero Road near Hwy 1	$34,120
	Total	**$646,763**

FBV
The cost of revised Amendment No. 8 is $957,418. The PCOs included in Amendment No. 8 are listed in the following table. If the amendment is approved, then the guaranteed maximum price will increase from $77,057,880 to $78,015,298.

PCO #	DESCRIPTION	Amount
97	Hydroseeding Soil Amendment & Coverage Limits	$25,932
103	SRF Reimbursement Request Requirements	$119,319
106	DC-33 Add Wash Rack Grease and Sand Interceptor	$35,287
107	DC-34 Vactor Unloading Facility Revisions	$38,880
108	Defer SEED PLANT Milestone and WRF Commission	$750,000
121	Credit for Non-Compliant Frog Barrier	$(12,000)
	Total	**$957,418**

Cogstone
The cost for Amendment No. 3 is $97,535.90. If the amendment is approved, then the total not to exceed amount for the Cogstone agreement will increase from $1,395,991.22 to $1,493,527.12.

Overall Fiscal Impact
Acceptance of all three contract amendments would not result in an increase in the overall WRF Project baseline budget of $159.84 million, as adopted in the FY 2022-23 City Budget, nor require any increase for ratepayers. However, the Conveyance Facilities budget and budget for cultural resource monitoring will be exceeded and $230,029 will need to be allocated to those line items from the $923,420 program contingency budget. The following table shows the contract amendments and budgets. If the amendments are approved, then there will be $693,391 remaining in the program contingency budget.

Current Approved WRF Budget	**$79,123,216**
Original GMP	$67,234,512
Total Approved Amendments	$9,823,368
Amendment No. 8	$957,418
Proposed GMP	$78,015,298
Budget Remaining	**$1,107,918**
Current Approved Conveyance Facilities Budget	**$34,701,121**
Original Contract Amount	$31,493,675
Total Approved Amendments	$2,702,906
Amendment No. 6	$646,763
Proposed Contract Amount	$34,843,344
Budget Remaining	**$(142,223)**
Current Approved Cogstone Budget	**$1,405,721**
Original Contract Amount	$264,918
Total Approved Amendments	$1,131,073
Amendment No. 3	$97,536
Proposed Contract Amount	$1,493,527
Budget Remaining	**$(87,806)**
Current Approved Program Contingency Budget	**$923,420**
Contingency Needed to Cover Anvil and Cogstone Amendments	$230,029
Program Contingency Budget Remaining	**$693,391**

DISCUSSION

Anvil Builders, Inc.

Amendment No. 6 consists of 12 potential change orders (PCO) that were negotiated between Anvil and the construction management team. The following sections briefly describe each PCO included in Amendment No. 6.

PCO #26: Relocate 12" City Reverse Osmosis (RO) Waterline at Sta 87+00

Anvil is reimbursed for extra work to relocate 12” City RO Waterline from Sta 85+90 to Sta 88+00, including potholing, saw cutting, trench excavation from Sta 85+90 to 88+00, installing waterline and backfill, hydrostatic testing, chlorinating, flushing, sampling/testing for BACT, placing concrete kickers for 45-degree elbows at tie-ins, and temporary paving. The relocation work was necessary to provide minimum clearance between the existing waterline and new parallel sewer lines the need for which were not known until after construction had commenced.

PCO 31: Existing Storm Drains Collapse at Sta 63+97

Anvil is reimbursed for extra work to repair collapsed storm drain at Sta 64+00, including excavating damaged storm drain, installation of new SD pipe, placement of CLSM backfill, backfilling and temporary paving. The collapse was not the fault of Anvil.

PCO 35: Existing RO Brine Line Discharge to WRF Outfall
Anvil is reimbursed for extra work related to the City's groundwater RO facility, including re-routing RO concentrate to the existing Air Relief Structure (Ocean Outfall), setting a new 48" sewer diversion manhole near RO Bldg and connecting a new 12" SS to new influent manhole, upsizing new sewer from 8" to 12" (noted above) from added 48" sewer diversion manhole to new influent manhole, installing new 6" RO flush line across Pump Station A site to retaining wall penetration and Cam-Lok (for flushing emergency storage tanks), deleting 6" flush line and vaults shown on Contract Drawings, connecting to existing re-purposed Desal Feed line for new RO discharge (from RO Bldg), and connecting new 6" ROC line to the existing Air relief Structure (Ocean Outfall). The need for this work was not known until after construction had commenced.

PCO 36: DDW-Initiated Realignments between Sta 99 and Sta 116
Anvil is reimbursed for extra work to relocate or sleeve existing utilities located too close to new Sewer Force Mains and/or the IPR line as determined by the State of California Department of Drinking Water (DDW), including at Stations 100+56, 108+20, 113+52, and 115+52. The work includes potholing in advance of the work, saw cutting and excavating existing utilities to be relocated or sleeved, installing new piping and/or sleeve casing pipes, backfilling, compacting, and temporary paving. The need for this work was not known until after construction had commenced.

PCO 37: Restoration of Quintana Rd Near Kings Ave
Anvil is reimbursed for extra work to temporarily restore pavement on Quintana Road near Kings Avenue after an inclement weather event. The work included placement of CLSM backfill in a low area, installation, and maintenance of temporary cold mix asphalt. Temporary repairs were requested by City staff for public safety. The need for this work was not the fault of Anvil.

PCO 45: Atascadero BR and Joint Trench Realignments
Anvil is reimbursed for extra work to mitigate and realign the joint trench on Atascadero Road due to potential conflicts with existing utilities and to mitigate the narrow road leaving minimal space for traffic control devises on paved surfacing. Anvil extra work included, confirming the location of existing parallel waterlines by potholing, confirming the vertical clearance between the revised joint trench and all known crossing waterlines, confirming no conflict with other adjacent and crossing utilities, and paint marking in the field, the edges (sawcut lines) of Anvil's proposed Joint Trench for City staff review. The need for this work was not known until after construction had commenced.

PCO 53: Pump Station B Grading and Drainage Revisions
Anvil is reimbursed for extra work to correct grading and drainage issues at Pump Station B as noted in RFI #162, including adding various grade changes, grade breaks, and elevation adjustments throughout the pump station site, adding a concrete curb around the Electrical Building, and adding a concrete valley gutter, drain inlet, and curb drain to allow precipitation runoff to leave the site and flow into the existing Main Street storm drain system. The need for this work was not known until after construction had commenced.

PCO 55: 200 LF Fused 4" HDPE for City Emergency Leak Response
Anvil is reimbursed for extra work to provide 200 LF fused 4-in HDPE for City use in their emergency response to a leak below Route-1 near Cloisters Park. This emergency work was an increase in the scope of work being provided by Anvil for the Pipelines and Pump Stations project.

PCO 57: Add FCA Restraint Rods and Lugs at Pump Stations

Anvil is reimbursed for extra work to furnish and install restraint rods and lugs at all flange coupling adapters (FCAs) at each pump station. This includes 6 each FCAs at Pump Station A and 6 each FCAs at Pump Station B. Without these restraint rods the FCAs could come apart and/or leak during high pressure conditions for the noted above grade portions of pump station discharge piping. The need for this work was not known until after construction had commenced.

PCO 58: Change Wet Well Piping Fit-up Bolts to 316SS (RFI 122)
Anvil is reimbursed for change in the specifications to furnish and install stainless steel flange bolts (rather than carbon steel bolts) for all flanged piping connections within wastewater wet wells at both Pump Station A and Pump Station B. The specified carbon steel bolts would have a significantly shorter service life.

PCO 59: Pump Station A Retaining Wall Revision
Anvil is reimbursed for extra work to increase the size of the pump station site retaining wall and concrete footing, and to add steps in the wall/footing as required. The extra work includes increasing the size of the reinforced concrete footing and changing the CMU blocks from 8" to 10" for additional structural strength. The work also includes adding 3 steps in the wall to accommodate planned finish grading at Pump Station A. The need for this work was not known until after construction had commenced.

PCO 68: Waterline Breaks on Atascadero Road near Hwy 1
Anvil is reimbursed for extra work to repair a broken existing City waterline that failed during Anvil's work near Sta 26+75, which ceased crew work and diverted resources to repair the failed waterline. The work includes saw cutting and excavating the existing waterline, installing new piping and repair couplings, backfilling, compacting, and temporary paving. The extra work occurred mostly after hours on June 7, 2022. The waterline break was not caused by Anvil.

FBV
Revised Amendment No. 7 consists of six potential change orders. The following sections briefly describe each PCO included in revised Amendment No. 7.

PCO No. 97 Hydroseeding Soil Amendment & Coverage Limits
FBV is reimbursed for additional expenditures related to providing hydroseeding and associated SWPPP and temporary irrigation for the soil slip area.

PCO No. 103 SRF Reimbursement Request Requirements
FBV is reimbursed for additional expenditures to assist the City with monthly billing information required for SRF funding, i.e., preparing a separate SRF formatted billing along with cost breakdown as per designated SRF categories, and provide all invoices. This task is performed on a monthly basis with FBV's payment application. Also includes costs to prepare an SRF formatted reconciliation breakdown for Pay Applications 1 to 31.

PCO No. 106 DC-33 Add Wash Rack Grease and Sand Interceptor
FBV is reimbursed for additional expenditures to provide and install a grease and sand interceptor facility at the WRF Wash Rack (vehicle wash bay) as requested by City staff to match normal developer requirements. This includes an additional underground multiple chamber vault and underground piping modifications.

PCO No. 107 DC 34 Vactor Unloading Facility Revisions

FBV is reimbursed for additional expenditures to provide and install vactor unloading station modifications requested by City staff, including procure and install two (2) 10' section of concrete k-rail with stainless steel brackets, fabrication and installation of stainless steel sluice gate within vactor trench drain, and installation of concrete weir wall in the downstream sewer manhole.

PCO No. 108 Defer Seed Plant Milestone and WRF Commissioning
FBV is reimbursed for additional expenditures related to deferring the planned seed plant activity from early July 2022 to early October 2022 (3 months) including, revising sequencing and coordination expenses, deferred maintenance period expenses through October 4, 2022, commissioning inefficiencies and remobilization expenses, extended overhead and added site expenses through October 4, 2022, increased cost for Builders Risk insurance, and allowed mark-ups and fees.

PCO No. 121 Credit for Alternate Frog Barrier Top Lip
The City is reimbursed for the cost reduction to provide install an aluminum anti-climbing lip at the top of the HDPE frog barrier rather than FRP, which will provide a longer lifespan (over 30 years compared to the 10 to 20 year estimate for FRP).

Cogstone
Amendment No. 3 for Cogstone includes the scope of work to complete the Archeological, Paleontological, and Native American Monitoring for the remainder of the ground disturbing activities for the Conveyance Facilities project. This includes monitoring for ground disturbing activities for the months of October and November as well as task management, supervision, reporting time, scheduling, and tribal coordination for the duration of the project.

QUARTERLY REPORT DISCUSSION

The WRF Quarterly Report is a document produced quarterly by the WRF project management team to provide status updates on schedule, budget, contract management, cashflow, key activities, and critical path items as they relate to the WRF program. Staff is requesting that the City Council review and provide feedback on the Q1 FY2023 WRF Quarterly Report and provide feedback on the information presented in this report. Key highlights from the report include:

The FY22-23 Q1 WRF Quarterly Report covers the period from July 1, 2022, to September 30, 2022, and the major highlights from this period include the following:

- A sludge seed date of October 4, 2022 has been set.
- The Morro Creek utility bridge was successfully installed on September 2, 2022.
- All major pipeline installation on the Conveyance Facilities construction is complete.
- All major wastewater conveyance facilities, including pump station, manholes, valves, and other supporting infrastructure are complete.
- The WRF treated effluent discharge line was successfully connected to the City's existing air-relief structure.
- The pilot injection well was successfully installed by Pacific Coast Well Drilling in September.
- The City was awarded a $9.3 million dollar Title XVI grant from the United States Bureau of Reclamation in August.

The major challenges that the City and Carollo project team began working through during Q1 FY 2023 are related to the overall schedule and budget and coordinating the final completion between

both the WRF and Conveyance Facilities project. The program team and FBV continued to work cooperatively during Q1 and reached an agreement on FBV's claim for the delay in Conveyance Facilities completion. The Conveyance Facilities are on track to be ready to deliver wastewater soon after October 4, which will allow FBV to start up the WRF's treatment processes and complete the facility in advance of the TSO deadline. At the end of Q1, the City, FBV, and Anvil anticipated a seed sludge date of October 4 and the delivery of City wastewater very soon after. The startup and commissioning period for the WRF is expected to take the majority of Q2. The WRF and Conveyance Facilities will be reaching substantial and final completion, respectively, in Q2 with final completion of the WRF expected in early 2023.

As of the end of Q1, the City will complete part of the contractual injection testing associated with the Pilot Injection Well project until the State Water Project deliveries temporarily shut down in the beginning of November. Once the SWP is back online, the City will continue with the 7-day continuous injection testing operation to identify groundwater movement characteristics between the existing monitoring well and the pilot injection well and may proceed with the extended injection testing to identify potential travel times with respect to the nearby monitoring well. After completing the injection testing, the program team's hydrogeologist, GSI, will select specific injection well locations and to design the wells, with construction of the full-scale system projected to occur in 2024. The current program budget was approved by City Council on June 28, 2022, at $159.84M and $119.6M has been spent to-date as of Q1.

At their meeting on November 16, 2022, the Public Works Advisory Board (PWAB) received a report and presentation from Paul Amico, WRF Program Manager, summarizing the Fiscal Year 2022-23 Quarter 1 Quarterly Report and an outline of the proposed contract amendments for Cogstone, Anvil Builders, and FBV. The PWAB raised several questions, and these were answered by the Program Manager and City staff. One PWAB member did note that he would prefer more detail on some of the proposed change orders in the future, which was noted by City staff and the Program Manager.

CONCLUSION

The contract amendments for Anvil, FBV, and Cogstone have been thoroughly reviewed and refined by the project management team and City staff. With the addition of these Contract modifications, the WRF Plant, Conveyance Facilities, and General Project components will continue to meet the timing and regulatory agency requirements of the entire WRF project.

ATTACHMENTS

1. Anvil Builders, Inc. Amendment No. 6
2. Revised FBV Amendment No. 8
3. Cogstone Amendment No. 3
4. Fiscal Year 22/23 Q1 Quarterly Report

01181.0001/836120.1

CITY OF MORRO BAY

AMENDMENT NO. 6 TO THE AGREEMENT
FOR CONSTRUCTION SERVICES
BETWEEN THE CITY OF MORRO BAY
AND ANVIL BUILDERS, INC.

This Amendment No. 6 is entered by and between the City of Morro Bay, a municipal corporation ("City") and Anvil Builders, Inc., a California corporation ("Contractor").

RECITALS

WHEREAS, City and Contractor (collectively, the "Parties") entered into an agreement as of November 10, 2020, for construction services for Contractor to complete the work for the Water Reclamation Facility Lift Station and Offsite Pipelines Project, (the "Project") which was approved by the City Council for a not to exceed amount of $31,493,675 (the "Agreement");

WHEREAS, the Parties amended the Agreement, as of October 12, 2021, to expand the tasks to be provided by Contractor and to increase the compensation payable in the amount of $674,485 (Amendment No. 1), increasing the total compensation payable pursuant to the Agreement to $32,168,160;

WHEREAS, the Parties amended the Agreement, as of January 11, 2022, to expand the tasks to be provided by Contractor and to increase the compensation payable in the amount of $587,502 (Amendment No. 2), increasing the total compensation payable pursuant to the Agreement to $32,755,662;

WHEREAS, the Parties amended the Agreement, as of March 22, 2022, to expand the tasks to be provided by Contractor and to increase the compensation payable in the amount of $241,317 (Amendment No. 3), increasing the total compensation payable pursuant to the Agreement to $32,996,979;

WHEREAS, the Parties amended the Agreement, as of June 14, 2022, to expand the tasks to be provided by Contractor which resulted in a reduction to the total contract in the amount of $54,065 (Amendment No. 4), therefore decreasing the total compensation payable pursuant to the Agreement to $32,942,914;

WHEREAS, the Parties amended the Agreement, as of August 23, 2022, to expand the tasks to be provided by Contractor, which resulted in an increase to the total contract in the amount of $1,253,667 (Amendment No. 5), therefore increasing the total compensation payable pursuant to the Agreement to $34,196,581;

WHEREAS, the Agreement, Amendment No. 1, Amendment No. 2, Amendment No. 3, Amendment No. 4, and Amendment No. 5 are referred to collectively as the "Amended Agreement;"

WHEREAS, the Parties again agree to amend the Amended Agreement because the construction services for the Project require an expansion and removal of some of the tasks to be provided by Contractor pursuant to the Amended Agreement;

WHEREAS, due to the expansion and reduction of tasks to be provided, the compensation payable pursuant to the Amended Agreement must be increased.

NOW THEREFORE, City and Contractor mutually agree to amend the Amended Agreement as follows:

1. The additional services to be provided by Contractor, pursuant to the Amended Agreement, as hereby further amended, shall include Change Orders 26, 31, 35, 36, 37, 45, 53, 55, 57, 58, 59, and 68 for the out-of-scope items, as set forth in Exhibit A, attached hereto and incorporated herein by this reference (the "Change Order No. 6"). As indicated in the attached Exhibit A, the final completion of the Amended Agreement shall be extended by 29 days per Change Order No. 26, 31, 35, 36, 53, and 68. The Change Order No. 6 activities shall have been already satisfactorily commenced as of the date of this Amendment No. 6 or be satisfactorily commenced immediately after November 22, 2022, and, to the extent not completed by that November date, completed no later than January 21, 2023.

2. The total compensation to be paid for the Amended Agreement, as a result of Change Order No. 6 is increased by $646,763. The activities for Change Order No. 6 shall be paid in accordance with (i) the amounts set forth in Exhibit A, and (ii) the process established by the Amended Agreement on a lump sum basis. With the amounts added for the Additional Work, the total compensation paid pursuant to the Amended Agreement shall be reduced to a not exceed amount of $34,843,344.00.

3. Contractor shall not be compensated for any services rendered in connection with its performance of the Amended Agreement, which are in addition to those set forth in previous amendments and Change Order No. 6.

4. Except as expressly stated herein, all terms and conditions in the Amended Agreement shall remain in full force and effect.

5. The effective date of this Amendment No. 6 shall be deemed to be November 22, 2022.

IN WITNESS WHEREOF, the parties have caused this Amendment No. 6 to be executed by their duly authorized representatives as of the day first written above.

CITY OF MORRO BAY

By: _____
Scott Collins,
City Manager

Attest:

_____
Dana Swanson, City Clerk

Approved As To Form:

_____
Chris Neumeyer, City Attorney

CONTRACTOR

By: _____
_____
Its _____

By: _____
_____
Its _____

City of Morro Bay
Water Reclamation Facility
Lift Stations and Offsite Pipelines Project
CHANGE ORDER 006

Project:	WRF Lift Stations and OffSite Pipelines Project	**Contractor:**	Anvil Builders, Inc.
Date:	November 29, 2022	**Project Manager:**	Chris Fassari

Upon mutual acceptance and execution of this document by the City of Morro Bay (City) and Anvil Builders, Inc. (Contractor), Contractor is hereby directed to make the following changes for the consideration set forth below:

See following page(s) for Descriptions and Reasons for Change

PCO #	DESCRIPTION	Reason For Change	Amount	Contract Time (Calendar Days)	
26	Relocate 12" City RO Waterline at Sta 87+00	DSC	$ 130,452.00	6	Days
31	Existing Storm Drains Collapse at Sta 63+97	DSC	$ 7,389.00	2	
35	Existing RO Brine Line Discharge to WRF Outfall	REG	$ 200,000.00	12	Days
36	DDW Initiated Realignments btwn Sta 99 and Sta 116	REG	$ 82,892.00	2	
37	Restoration of Quintana Near Kings during Inclement Weather	DSC	$ 13,000.00		
45	Atascadero BR and Joint Trench Realignments	DSC	$ 34,023.00		
53	Pump Station B Grading and Drainage Revisions	E&O	$ 65,102.00	5	Days
55	200 LF Fused 4" HDPE for City Emergency Leak Response	CR2	$ 1,338.00		
57	Add FCA Restraint Rods and Lugs at Pump Stations	E&O	$ 47,647.00		
58	Change Wet Well Piping Fit-up Bolts to 316SS (RFI 122)	CR2	$ 9,963.00		
59	Pump Station A Retaining Wall Revision to Detail 1	E&O	$ 20,837.00		
68	Waterline Breaks on Atascadero Road near Hwy 1	DSC	$ 34,120.00	2	
		NET CHANGE ORDER ADJUSTMENT	$ 646,763.00	29 Days	

ORIGINAL CONTRACT AMOUNT	$ 31,493,675.00
Previous Change Orders	$ 2,702,906.00
Previous Contract Amount	$ 34,196,581.00
Adjustments by this Change Order	$ 646,763.00
Change Order to Date	$ 3,349,669.00
New Contract Amount	$ 34,843,344.00

CURRENT FINAL COMPLETION DATE	11/2/2022
Extension Days (Calendar)	29 Days
NEW FINAL COMPLETION	12/1/2022

Acceptance of this Change Order constitutes an agreement between the City and Contractor, and the work is to be performed subject to the same terms and conditions as are contained in the Agreement with Contractor and for work on the above-mentioned project.

By signature of this Change Order, the Contractor acknowledges that the adjustments to the Contract Cost and Time contained in the Change Order are in full satisfaction and accord and so waives any right to claim any further cost and time impacts at any time during and after completion of the Contract for the changes encompassed by this Change Order (EXCEPT AS NOTED IN ITEM 13.1 HEREIN WHEREIN DELAY IMPACTS ARE ON-GOING).

ACCEPTED

Anvil Builders Inc.

Contractor (Company Name)

(Authorized Signature) (Date)

Chris Fassari

(Print Name and Title)

When signed by the Construction Manager, and upon execution of source document Amendment by City Council, this document becomes effective IMMEDIATELY, and Contractor shall proceed with the change(s) described above.

APPROVED

Carollo Engineers Inc / MEG Inc.

Construction Manager

Authorized Signature (Date)

Steve Mimiaga - Construction Mngr.

(Print Name and Title)

REVISED AND RESTATED AMENDMENT NO. 8 TO THE AGREEMENT FOR DESIGN/BUILD SERVICES AMONG THE CITY OF MORRO BAY AND OVERLAND CONTRACTING INC. AND J.R. FILANC CONSTRUCTION COMPANY, INC.

This Revised and Restated Amendment No. 8 is entered by and among the CITY OF MORRO BAY, a municipal corporation (City) and OVERLAND CONTRACTING INC., a Delaware corporation, dba KS OVERLAND CONTRACTING, INC. (OCI) and J.R. FILANC CONSTRUCTION COMPANY, INC., a California corporation (JRF), the latter two acting as FBV Morro Bay Joint Venture (collectively, OCI and JRF are referred to as the "Design Build Entity"). City and Design Build Entity are sometimes referred to individually as "Party" and collectively "Parties."

RECITALS

WHEREAS, City and the Design Build Entity entered into an agreement as of October 23, 2018, to design and construct a new Water Reclamation Facility (Project), which was approved by the City Council for a Cost Plus with Guaranteed Not to Exceed Amount of $67,234,512. (Agreement);

WHEREAS, the Parties amended the Agreement, as of May 14, 2019, to provide for design and construction of additional elements for the Project and to increase the Cost Plus with Guaranteed Not to Exceed Amount for the construction of the Project to $68,870,571 (Amendment No. 1);

WHEREAS, the Parties amended the Agreement, as of April 21, 2020, to provide for updated Davis Bacon Wage Requirements for the Project and to increase the Cost Plus with Not to Exceed Amount for the construction of the Project to $68,934,508 (Amendment No. 2);

WHEREAS, the Parties amended the Agreement, as of May 20, 2020, to provide design and construction of additional elements for the Project and to increase the Cost Plus with Not to Exceed Amount for the construction of the Project to $74,926,725 (Amendment No. 3);

WHEREAS, the Parties amended the Agreement, as of November 17, 2020, to provide design and construction of additional elements for the Project and to increase the Cost Plus with Not to Exceed Amount for the construction of the Project to $75,761,822 (Amendment No. 4);

WHEREAS, the Parties amended the Agreement, as of March 9, 2021, to provide changes and adjustments to the design and construction of the Project and to decrease the Cost Plus with Not to Exceed Amount for the construction of the Project to $75,565,877 (Amendment No. 5);

WHEREAS, the Parties amended the Agreement, as of August 24, 2021, to provide changes and adjustments to the design and construction of the Project and to increase the Cost Plus with Not to Exceed Amount for the construction of the Project to $76,697,994 (Amendment No. 6);

WHEREAS, the Parties amended the Agreement, as of August 23, 2022, to provide changes and adjustments to the design and construction of the Project and to increase the Cost Plus with Not to Exceed Amount for the construction of the Project to $77,057,879 (Amendment No. 7); and

WHEREAS, the Agreement, Amendment No. 1, Amendment No. 2, Amendment No. 3, Amendment No. 4, Amendment No. 5, Amendment No. 6, and Amendment No. 7 are collectively referred to as the Amended Agreement; and

NOW, THEREFORE, City and Design Build Entity mutually agree to further amend the Amended Agreement as follows:

1. The revised scope of services to be provided by the Design Built Entity, pursuant to the Amended Agreement, as hereby amended, shall include the Scope of Work, as set forth in Exhibit B, dated November 29, 2022, attached hereto and incorporated herein by this reference with the Required Changes (together the original Scope of Work and the Required Changes referred to as the "New Scope of Work"). At the direction of the City, the design of the New Scope of Work, including without limitation the Required Changes, has already commenced and shall continue. The Exhibit B, attached to the Amended Agreement, shall be replaced in its entirety with the new Exhibit B attached to this Amendment and incorporated herein, as well as into the Amended Agreement as amended herein.

2. The compensation to be paid for the New Scope of Work shall be paid in accordance with the terms of the Agreement on a cost plus basis and shall increase the Original Cost Plus with Guaranteed Not to Exceed Amount by a total of $957,418, for a revised Cost Plus Guaranteed Not to Exceed Amount of $78,015,298 for the Amended Agreement, as herein amended.

3. The Exhibit A, attached to the Amended Agreement, shall be replaced in its entirety with the new Exhibit A dated November 29, 2022, attached hereto and incorporated herein, as well as into the Amended Agreement as amended herein.

4. The one-year time period for the Guarantee set forth in Section 3.18 of the Amended Agreement relating to the Guarantee shall commence on July 12, 2022, for workmanship, materials, equipment and building components, except for the RO and MF membranes, which shall instead commence when those membranes have been properly installed.

5. Except as expressly stated herein, all terms and conditions in the Amended Agreement shall remain in full force and effect.

6. The Effective Date of this Amendment No. 8 shall be deemed to be November 29, 2022.

IN WITNESS WHEREOF, the Parties have caused this Amendment No. 7 to be executed by their duly authorized representatives.

CITY OF MORRO BAY
a municipal corporation

By: _____
Scott Collins, City Manager

Dated: _____, 2022

Attest:

_____
Dana Swanson, City Clerk

Approved As To Form:

_____
Chris Neumeyer, City Attorney

DESIGN BUILD ENTITY

OVERLAND CONTRACTING INC.

By: _____
Charles B. Mitchell,
Its Attorney in Fact

Dated: _____, 2022

J.R. FILANC CONSTRUCTION COMPANY, INC.

By: _____
Omar Rodea,
Its President

Dated: _____, 2022

Acting together as FBV Morro Bay Joint Venture, PWCR #947773 – Classification A

Engineers...Working Wonders With Water®

1401 Fulton Street, Suite 802, Fresno, California 93721
P. 559.436.6616 F. 559.436.1191

Exhibit A (Revised)

(Revision thru Amendment No. 8)

Project Milestone Schedule

The Project Milestones for the Water Reclamation Facility Project (Project) are defined below. The Project is composed of two (2) phases: Design Phase and Construction Phase

Separate Notices to Proceed (NTPs) will be issued for each phase of the Project. If the NTP dates change, the subsequent dates may change accordingly.

Project Milestones

Project Milestones	Milestone Date
Design NTP	November 5, 2018
Construction NTP	March 20, 2020
Original Calendar Days to Substantial Completion	829
Original Substantial Completion (as of NTP)	June 27, 2022
Original Calendar Days to Final Completion	886
Original Final Completion (as of NTP)	August 23, 2022
Amendment 4 Calendar Day Time Extension*	8
Amendment 6 Calendar Day Time Extension*	7
Amendment 7 Calendar Day Time Extension	0
Amendment 8 Calendar Day Time Extension*	187
Total Added Calendar Days	202
Revised Calendar Days to Substantial Completion	1031
Revised Substantial Completion (thru Amendment 8)	January 15, 2023
Revised Calendar Days to Final Completion	1088
Revised Final Completion (thru Amendment 8)	March 12,, 2023

*Notes:

1. Potential Change Order No. 41 - Add Perimeter Barbed Wire Fence (Amend 4)
2. Environmental Allowance 1B - Temporary Wildlife Exclusionary Fencing (Amend 4)
3. Potential Change Order No. 96 - January 2021 Storm Event & Texas Ice Storm (Amend 6)
4. Potential Change Order No. 108 - Defer SEED PLANT Milestone and WRF Commission (Amend 8)

Exhibit B

Scope of Work

Table of Contents

SECTION 1 Introduction 1-1

1.1 Background and Project Goals 1-1

1.2 Overview 1-1

1.3 Design-Build Entity & City Responsibilities 1-3

1.4 Influent Flows and Water Quality 1-7

1.5 General Requirements 1-13

1.6 Effluent Quality Requirements 1-13

1.7 Treatment Capacity 1-14

1.8 Plant Production Requirements 1-15

1.9 Durability Requirements 1-15

1.10 Anticipated Environmental Mitigation Measures 1-16

1.11 Process Performance Guarantees 1-16

1.12 [PCO 064] 1-18

SECTION 2 Treatment Process Criteria 2-1

2.1 General 2-1

2.2 Influent (Coarse) Screening 2-2

2.3 Grit Removal 2-5

2.4 SAFE System (section was formerly titled Flow Equalization Basin) 2-8

2.5 Fine Screening 2-10

2.6 Membrane Bioreactor 2-13

2.7 Sludge Holding Tanks 2-19

2.8 Sludge Dewatering 2-21

2.9 Reverse Osmosis 2-24

2.10 Ultraviolet Advanced Oxidation Process (UVAOP) 2-30

2.11 Chemical Storage and Feed Facilities 2-32

2.12 Odor Control 2-35

2.13 Outfall Pump Station (Effluent Pump Station) 2-37

2.14 IPR Product Water Pump Station 2-40

2.15 Product Water Storage Tank 2-43

2.16 On-site Reclaimed Water System 2-44

2.17 Vactor Washdown Area 2-46

SECTION 3 Architectural and Landscaping Criteria 3-1

3.1 General 3-1

3.2 Applicable Codes 3-2

3.3 Buildings 3-2

3.4 Aesthetic Design 3-3

3.5 Exterior Materials 3-3

3.6 Interior Materials and Building Elements 3-5

3.7 Plantings 3-14

3.8 Irrigation 3-15

3.9 Fences and Gates 3-16

3.10 Space Needs 3-17

3.11 Space Needs Identification Forms 3-17

3.12 Equipment and Furniture List 3-17

3.13 Landscape Plan 3-20

SECTION 4 Structural Criteria 4-20

4.1 General 4-20

4.2 Load and Deflection 4-20

4.3 Building Structure Types 4-21

4.4 Tanks and Basins 4-24

4.5 Non-Building and Miscellaneous Structural Elements 4-26

4.6 Foundations 4-27

4.7 Structural Materials 4-27

SECTION 5 Civil Criteria 5-1

5.1 General 5-1

5.2 Site Improvements 5-1

5.3 Site Layout 5-2

5.4 Site Access Road 5-3

5.5 Offsite Pipeline Coordination 5-5

5.6 Potable Water 5-5

5.7 Fire Protection 5-9

5.8 Grading and Drainage 5-10

5.9 Pavement/Roadways 5-12

5.10 Construction Dust Control and SWPPP Stormwater Management 5-14

5.11 Facility Stormwater Management Post-Construction Requirements 5-16

5.12 Noise Control 5-16

SECTION 6 Geotechnical Criteria 6-1

SECTION 7 Mechanical Piping Criteria 7-1

7.1 General 7-1

7.2 Piping 7-2

7.3 Valves 7-3

7.4 Valve Actuators 7-6

7.5 Pumps 7-7

7.6 Nuts and Bolts 7-9

SECTION 8 Electrical System Criteria 8-1

8.1 Utility Electrical Service 8-2

8.2 Data Service 8-2

8.3 Alternative Solar Power 8-2

8.4 Electrical Distribution 8-3

8.5 Basic Electrical Work 8-3

8.6 Distribution Equipment 8-6

8.7 Lighting Equipment 8-12

8.8 Fire Alarm System 8-13

8.9 Hazardous and Environmental Locations 8-13

8.10 Electrical System Studies 8-14

8.11 Electrical Testing 8-15

SECTION 9 Instrumentation and Controls 9-1

9.1 General 9-1

9.2 System Description 9-2

9.3 Cyber Security 9-7

9.4 Control System Hardware 9-9

9.5 Monitoring and Control 9-15

SECTION 10 Mechanical HVAC Criteria 10-1

10.1 General 10-1

10.2 Basic Mechanical HVAC Work 10-4

10.3 Fuel Storage for Emergency Generator 10-5

10.4 Mechanical HVAC Equipment 10-6

10.5 Ductwork and Appurtenances 10-7

10.6 Mechanical Controls and Monitoring 10-8

10.7 Startup, Commissioning, and Testing 10-9

SECTION 11 Demolition and Removal of Existing WWTP 11-1

11.1 General – Demolition of Existing WWTP will be performed by other and this option is removed from the contract. 11-1

SECTION 12 Facility Startup and Commissioning and Transfer of Operations 12-1

12.1 General 12-1

12.2 Definitions 12-1

12.3 Facility Testing Plan 12-1

12.4 Functional Testing 12-2

12.5 Acceptance Testing 12-2

12.6 Performance and Operation Testing 12-3

SECTION 13 Security 13-1

13.1 General 13-1

SECTION 14 Deliverables 14-4

(Previous Version Attachments Encompassed by Reference)

ATTACHMENT 1 – IFC Drawings with PCO Revisions

ATTACHMENT 2 – Anticipated Mitigation Measures

ATTACHMENT 3 – SCADA Master Plan Compliance [PCO 018]

ATTACHMENT 4 – DC-017 [PCO 89]

List of Tables

Table 1-1: Morro Bay WRF Influent Flow and Water Quality Basis of Design 1-7

List of Figures

Figure 1-1: South Bay Boulevard WRF Site 1-1

Figure 5-1: WRF Site Access Road 5-4

Figure 5-2: Utility Coordination Plan 5-8

List of Acronyms and Abbreviations

AABC	Associated Air Balance Council
AAF	Average Annual Flow
AC	Air Conditioning
AF	Acre-Foot
AFY	Acre-Feet per Year
AHRI	Air Conditioning, Heating, and Refrigeration Institute
AMCA	Air Moving and Conditioning Association
ANSI	American National Standards Institute
AOP	Advanced Oxidation Process
ASCE	American Society of Civil Engineers
ASHRAE	American Society of Heating, Refrigerating, and Air Conditioning Engineers, Inc.
ASME	American Society of Mechanical Engineers
ASTM	American Society for Testing and Materials
AWS	American Welding Society
AWWA	American Water Works Association
BMP	Best Management Practice
BOD	Biochemical Oxygen Demand
BOD_5	5-Day Biochemical Oxygen Demand
CBC	California Building Code
CCR	California Code of Regulations
CDP	Coastal Development Permit
CEnC	California Energy Code
CEQA	California Environmental Quality Act
CF	Cartridge Filter
CFC	California Fire Code
CL2	Chlorine
CMC	California Mechanical Code
CMMS	Computerized Maintenance Management System
CMU	Cement Mortar Unit
CPVC	Chlorinated Polyvinyl Chloride
CSD	Cayucos Sanitary District
CWI	Certified Welding Inspector
DB	Design Build Entity
DC	Direct Current
DDW	Department of Drinking Water
DHS	Department of Homeland Security
DO	Dissolved Oxygen
EQ	Equalization
ESA	Environmental Science Associates
FAT	Full Advanced Treatment
FMP	Facility Master Plan
FRP	Fiber-Reinforced Plastic
GFCI	Ground Fault Circuit Interrupter
GFD	Gallon per Square Foot per Day
GRRP	Groundwater Replenishment Reuse Project
H2S	Hydrogen Sulfide
HID	Host Intrusion Detector
HMI	Human Machine Interface
HVAC	Heating, Ventilation, and Air Conditioning
IES	Illumination Engineers Society
IPR	Indirect Potable Reuse
LAN	Local Area Network
LCP	Local Control Panel
LEL	Lower Explosive Limit
MBCSD	City of Morro Bay & Cayucos Sanitary District
MBR	Membrane Bioreactor
MCP	Master Control Panel
MFR	Manufacturer
mg/L	Milligrams per liter
MGD	Million Gallons per Day
mL	Milliliter
mm	Millimeter
MMF	Maximum Monthly Flow
MSS	Manufacturer's Standardization Society
NEMA	National Electrical Manufacturers Association
NFPA	National Fire Protection Association
NOV	Notice of Violation
NPDES	National Pollution Discharge Elimination System
O&M	Operation and Maintenance

OEM	Original Equipment Manufacturer
OIT	Operator Interface Terminal
OSHA	Occupational Safety and Health Administration
PDF	Peak Daily Flow
PFD	Process Flow Diagram
PG&E	Pacific Gas and Electric
PHF	Peak Hour Flow
PID	Proportional, Integral, Derivative
PLC	Programmable Logic Controller
ppm	Parts per million
psf	Pounds per Square Foot
psi	Pounds per Square Inch
PVC	Polyvinyl Chloride
RO	Reverse Osmosis
RWQCB	Regional Water Quality Control Board
SBB	South Bay Boulevard
SCADA	Supervisory Control and Data Acquisition
SMACNA	Sheet Metal and Air Conditioning Contractors National Association
SS	Stainless Steel
SSRV	Solid State Reduced Voltage
SWRCB	State Water Resources Control Board
TOC	Total Organic Carbon
TKN	Total Kjeldahl Nitrogen
TMP	Trans-Membrane Pressure
TSS	Total Suspended Solids
TVSS	Transient Voltage Surge Suppression
UL	Underwriters Laboratories, Inc.
UPS	Uninterruptible Power Supply
UV	Ultraviolet
UVAOP	Ultraviolet Advanced Oxidation Process
UVT	Ultraviolet Transmissivity
VFD	Variable Frequency Drive
WAN	Wide Area Network
wc	Water Column
WDR	Waste Discharge Requirements
WRF	Water Reclamation Facility
WWE	Waterworks Engineers
WWTP	Wastewater Treatment Plant

SECTION 1 INTRODUCTION

This document defines the scope of work for the Design Build delivery of the Morro Bay WRF Project. This document was created from the Performance Criteria Report, as modified to conform to the latest design and Amendment 3. The design development process yielded 17 Potential Change Orders (PCOs) that were approved by City Council on May 14, 2019. There are an additional 26 PCOs included in this latest document and design set. The scope changes associated with the original 17 PCOs are still reflected in this document but are no longer in red text. The newest 26 PCOs are highlighted in this document by red text. Section numbers have been maintained from the PCR. This document includes the following scope definition attachments:

1. Annotated IFC Design Drawings. [clarification]
2. Anticipated EIR Mitigation Measures
3. Performance Guarantees

1.1 Background and Project Goals

Section not used.

1.2 Overview

The City of Morro Bay WRF will be designed to treat an annual average flow of 0.97 million gallons per day (MGD) of wastewater through full advanced treatment. The WRF will provide preliminary, secondary, tertiary, and advanced treatment, and will produce recycled water meeting indirect potable reuse (IPR) standards for a groundwater replenishment reuse project (GRRP) using subsurface application, as defined in California Code of Regulations (CCR) Title 22 recycled water requirements. The WRF will be located at the South Bay Boulevard (SBB) site. IPR recycled water will be conveyed to injection wells in the Morro Valley (conveyance by others). An effluent pipeline (by others) will convey advanced treatment waste streams, including brine, to the existing Morro Bay Cayucos Sanitary District (MBCSD) jointly-owned ocean outfall at the site of the existing wastewater treatment plant (WWTP).

A new lift station (by others) near the existing WWTP will convey raw wastewater through force main(s) (by others) to the WRF. The WRF, access road to the WRF, and all design and construction within the South Bay Boulevard (SBB) site and adjacent area north of Highway 1 right-of-way (ROW) are collectively referred to herein as the WRF Onsite Improvements Project (Project).

Figure 1-1: South Bay Boulevard WRF Site

The following table summarizes the current and anticipated WRF Project efforts and coordination of work. Additional details on the division of responsibilities are provided in the following Sections of this Report.

Work Effort	Responsible Party	Comments
Environmental Documents: CEQA plus	Environmental Science Associates (ESA)	Draft EIR scheduled for March 2018; Certification anticipated in June 2018
WRF Lift Station and Offsite Pipeline Improvements Design	Waterworks Engineers (WWE)	
Program Management Support, Design-Build Owner's Representative, and Construction Administration/Management	City and City's Consultants	
WRF Lift Station and Offsite Pipelines Construction	TBD (by others)	
Injection Well Pilot Study, Design, and Construction	TBD (by others)	
Land Use Permitting and Planning Agency Coordination	City and City's Consultants	

The WRF Onsite Improvements will consist of the following main components within the SBB site and adjacent access easement:

- Influent Screening
- Grit Removal
- SAFE System (auxiliary treatment of peak flows including the SAFE Settle tank and the SAFE Filter) [PCO 017]
- Fine Screening
- Membrane Bioreactor
- Sludge Holding Tanks
- Sludge Dewatering
- Reverse Osmosis
- Ultraviolet Advanced Oxidation Process
- Odor Control (only to be furnish for headworks and SAFE Diversion Box) [PCO 004]
- Effluent Pump Station and Connection to offsite pipeline (by others)
- Calcite Contactors, Product Water Tank, IPR Pump Station, and Connection to offsite pipeline (by others)
- Influent Dual Force Main Connections (forcemains by others) [PCO 022]
- Operations and Maintenance Buildings
- Access Road and Site Access

- Utility Extension into Site (all utilities assumed available at entrance road connection point, see figure herein)

The City plans to provide full onsite WRF staffing 40 hours per week with remote and on-call operations on nights and weekends.

1.3 Design-Build Entity & City Responsibilities

The table below identifies responsibilities for main components of the Project. If there is a conflict between this table and the interpretation of responsibilities in the text within this document, the responsibility defined on this table shall govern.

	DB	City
Project Management/Administration		
Project Management	Lead	
Report of Waste Discharge and Title 22 Report	Support	Lead
Air Pollution Control District permit application for temporary and permanent facilities	Lead	Support
Reporting/correspondence with 3rd parties (stakeholders)	Support	Lead
Environmental Impact Report		Lead
Progress reporting to Owner	Lead	
Conditional Use Permit/Coastal Development Permit	Support	Lead
SAFE System permitting	Support	Lead
Engineering and Design Activities		
Civil sitework	Lead	
Site layout	Lead	
Highway 1/South Bay Boulevard access	Lead	Support
Entrance road	Lead	Support
Building Permit	Lead	Support
Geotechnical investigations	Lead	
Utility connections	Lead	
Connections to influent force main, recycled water pipeline, dedicated City fiber optic line, and effluent pipe 20 feet north of access easement boundary at Highway 1 ROW	Lead	
All process systems and all support/ancillary systems, including components identified below (unless specifically identified as “Support”)	Lead	
SAFE System (auxiliary treatment of peak flows)	Lead	
Odor control	Lead	
Screening and grit removal	Lead	
Membrane bioreactor	Lead	
Reverse osmosis	Lead	
Chemical feed systems	Lead	
Chemical clean in place system and chemical storage	Lead	
UVAOP system	Lead	
Dewatering	Lead	
Sludge Holding Tanks	Lead	
Post treatment	Lead	
Recycled water pump station	Lead	
Effluent pump station	Lead	

	DB	City
On-site reclaimed water system	Lead	
Site ingress from Highway 1	Lead	
Product water storage [clarification]	Lead	
Stormwater facilities including compliance with applicable City, County, State Requirements, Local Ordinances, and local development standards	Lead	
Structural	Lead	
Building plumbing	Lead	
Fire protection/detection/alarm systems and Fire Department compliance	Lead	
Standby emergency power	Lead	
HVAC	Lead	
Electrical/electrical building(s)	Lead	
Instrumentation and controls	Lead	
Valves	Lead	
Process and field piping	Lead	
Pumping	Lead	
Electrical metering equipment	Lead	
Electrical control panels	Lead	
Cables, conduits & trays	Lead	
Power and control wiring	Lead	
Transformers	Lead	
Switchgear	Lead	
PG&E Electrical Service Application and Handout	Support	Lead
Southern California Natural Gas Service Application	Support	Lead
Communications on site and with remote lift station PLC via fiber optic	Lead	
Communication service (internet/phone) from offsite to the access easement boundary at Highway 1 ROW	Support	Lead
Communication with lift station/outfall/injection well sites	Support (lead for WRF site components)	Lead
Process equipment layout	Lead	
System integration	Lead	
Security	Lead	
Operation building	Lead	
Maintenance building	Lead	
Equipment and vehicle storage	Lead	
Outdoor storage areas	Lead	
Covered and uncovered parking	Lead	
Existing facility demolition, IF ALTERNATIVE IS EXCERCISED		Lead
Indoor/outdoor lighting	Lead	
Grounding/earthing	Lead	
Cathodic protection	Lead	
Lightning protection systems	Lead	
Specifications	Lead	
Project drawings	Lead	
As-built drawings	Lead	
Operations and maintenance equipment (cranes, hoist, etc.)	Lead	

	DB	City
Spare parts development	Lead	
Asset management program, Computerized Management and Maintenance System (CMMS), and development and implementation of proposed system(s)	Lead	
Operations and maintenance manuals	Lead	
Operations and Maintenance Buildings		
Operations Building equipment - DB to coordinate requirements with City	Lead	Support
Office equipment – DB to coordinate requirements with City	Lead	Support
Furnishing laboratory equipment	Support	Lead
Design, fit-out & permitting of laboratory	Lead	Support
Conference/training/break room – DB to coordinate requirements with City	Lead	Support
General Construction Activities		
Supply of power, water and other utilities, services, chemicals and all consumables necessary during the time of plant construction through to acceptance testing	Lead	
Equipment installation	Lead	
Temporary site access	Lead	
Outdoor lighting	Lead	
Fencing	Lead	
Equipment Procurement		
Specification development, equipment selection, procurement documentation development, purchase, delivery and installation	Lead	Support
Review and analysis for compliance with specifications	Lead	
Placement of purchase orders and issuance of subcontracts	Lead	
Critical item factory inspections and testing	Lead	Support
Equipment inspection upon arrival	Lead	
Processing of invoices for payment	Lead	
Spare parts list development and inventory	Lead	
Site Construction Work		
Site preparation	Lead	
Site security, signage, safety items	Lead	
South Bay Boulevard access improvements	Lead	
Access roadway improvements	Lead	
Civil sitework (grading, paving, drainage, fencing)	Lead	
On-site utility installations and connections	Lead	
Foundation and slab installation	Lead	
Building construction and installation	Lead	
Plumbing installation	Lead	
HVAC installation	Lead	
Fire protection equipment installation	Lead	
All process equipment installation	Lead	
Non-process equipment installation	Lead	
Connections to influent force main, recycled water pipeline, and treated effluent pipe at 20 feet inside site boundary	Lead	
Landscaping and Irrigation	Lead	

	DB	City
Perimeter fencing	Lead	
Signage and installation of signage	Lead	
Systems testing and approvals	Lead	
Site cleanup	Lead	
Stormwater management and SWPPP	Lead	
Construction Management		
Construction supervision	Lead	Support
Construction inspection* [PCO 069]	Lead	Support
Project quality control	Lead	
City interface/communication	Lead	Support
Public communication	Support	Lead
Permit support and adherence (construction)	Lead	
Permit support and adherence (occupancy and operation)	Lead	
Field generated Request for Information	Lead	
Shop drawing reviews	Lead	
Punch listing	Lead	Support
Commissioning and Acceptance Testing		
Startup/commissioning plan	Lead	Support
Factory acceptance tests	Lead	Support
Manufacturers' Certificate of Proper Installation	Lead	
Functional tests	Lead	Support
14-day Acceptance test	Lead	Support
Training of operations staff	Lead	Support
Operations plan	Lead	Support
Operations manual	Lead	Support
CMMS development and implementation	Lead	Support
Asset management program	Lead	Support
Spare parts inventory and management	Lead	Support
Supply of consumables during functional testing; acceptance testing; and performance and operation testing: power, water, chemicals, etc.	Support	Lead [PCO119]
Final acceptance	Lead	Support
Final project documentation	Lead	Support
Initial fill and all first oil changes on equipment	Lead	
7 Month Performance and Operational Testing [PCO 064]		
Plant operations		Lead
Plant staffing		Lead
City personnel equipment training		Lead
CMMS usage		Lead
Plant maintenance activities, including costing & documenting		Lead
Warranty repair items (1st year)	Lead	
Asset management implementation		Lead
Chemical deliveries		Lead
Electrical/mechanical/process/civil and environmental support		
Permit regulatory compliance		Lead
Plant tours		Lead
Existing WWTP Decommissioning/Demolition (only included if alternative is exercised)		

	DB	City
Existing WWTP shutdown/decommissioning		Lead
Tank cleaning (if alternative is exercised)		Lead
Plant demolition (if alternative is exercised)		Lead

*Note that all 3rd party testing and inspection shall be provided by FBV up to $200,000. Anything in excess of $343,120 in regards to 3rd party testing and inspection shall be borne by the City. [PCO 069] [PCO 98]

1.4 Influent Flows and Water Quality

Influent flow, water quality, and loads the plant shall be designed to treat are summarized on Table 1-1.

Table 1-1: Morro Bay WRF Influent Flow and Water Quality Basis of Design

Parameter	Unit of Measure[1-7]	Annual Average[9]	Minimum Monthly Average[10,11]	Maximum Monthly Average[10,12]	Maximum [14]	Peak Hour
Flow	**MGD**	**0.97**		**1.16**	**2.74**	**8.14**
BOD_5	mg/L	354		374		
	lb/d	2,864		3,618	4,845	
TSS	mg/L	392		437		
	lb/d	3,171		4,228	6,193	
TKN	mg-N/L	57		60		
	lb-N/d	461		580	777	
NH_x-N	mg-N/L	46		48		
	lb-N/d	369		464	622	
Total Phosphorus	mg-P/L	6		8		
	lb-P/d	49		77	183	
Ortho Phosphorus	mg-P/L	4		5		
	lb-P/d	32		48	114	
Total Fats, Oils and Grease	mg/L	80		90	120	
Free Oils	mg/L	1		1	1	
Mineral or Non-Biodegradable Oils	mg/L	5		5	5	
pH	S.U	range: 6.7 - 8.5				
Temperature	°C	20	17		24	
Total Dissolved Solids	mg/L			920	1400	
Conductivity	µS/cm			1767	2110	
Chloride	mg/L			250	460	
Fluoride	mg/L			0.36	1	

Parameter	Unit of Measure[1-7]	Annual Average[9]	Minimum Monthly Average[10,11]	Maximum Monthly Average[10,12]	Maximum [14]	Peak Hour
Sulfate	mg/L			125	165	
Calcium	mg/L			169	186	
Total Recoverable Iron	mg/L			5.1	9.4	
Magnesium	mg/L			74	81	
Potassium	mg/L			19	26	
Silica	mg/L			12	24	
Sodium	mg/L			170	250	
Aluminum	mg/L			0.41	0.75	
Barium	mg/L			0.01	0.02	
Manganese	mg/L			0.04	0.05	
Strontium	mg/L			0.34	0.42	
Total Organic Carbon	mg/L			99	140	
Dissolved Organic Carbon	mg/L			7	9	
N-Nitrosodimethylamine (NDMA)	mg/L				$6.5x10^{-5}$	
N-Nitrosodiethyamine (NDEA)	mg/L				$5.0x10^{-5}$	
N-Nitrosodi-n-propylamine (NDPA)	mg/L				$8.3x10^{-5}$	
1,4-Dioxane	mg/L				$1.3x10^{-3}$	
Copper	mg/L				13.00000	
Lead	mg/L				0.15000	
Antimony	mg/L				0.00600	
Arsenic	mg/L				0.01000	
Asbestos (for fibers >10 microns long)	MFL				7.00000	
Barium	mg/L				1.00000	
Beryllium	mg/L				0.00400	
Cadmium	mg/L				0.00500	
Chromium, Total	mg/L				0.05000	
Chromium, Hexavalent	mg/L				0.01000	
Cyanide	mg/L				0.15000	
Fluoride	mg/L				2.00000	
Mercury (inorganic)	mg/L				0.00500	
Nickel	mg/L				0.10000	
Perchlorate	mg/L				0.00600	
Selenium	mg/L				0.05000	
Thallium	mg/L				0.00200	

Parameter	Unit of Measure[1-7]	Annual Average[9]	Minimum Monthly Average[10,11]	Maximum Monthly Average[10,12]	Maximum [14]	Peak Hour
Boron	mg/L				0.39000	
n-Butylbenzene	mg/L				0.26000	
sec-Butylbenzene	mg/L				0.26000	
tert-Butylbenzene	mg/L				0.26000	
Carbon disulfide	mg/L				0.16000	
Chlorate	mg/L				0.80000	
2-Chlorotoluene	mg/L				0.14000	
4-Chlorotoluene	mg/L				0.14000	
Diazinon	mg/L				0.00120	
Dichlorodifluoromethane (Freon 12)	mg/L				1.00000	
Ethylene glycol	mg/L				14.00000	
Formaldehyde	mg/L				0.10000	
HMX	mg/L				0.35000	
Isopropylbenzene	mg/L				0.77000	
Manganese	mg/L				0.50000	
Methyl isobutyl ketone (MIBK)	mg/L				0.12000	
Naphthalene	mg/L				0.01700	
Propachlor**	mg/L				0.09000	
n-Propylbenzene	mg/L				0.26000	
RDX	mg/L				0.00030	
Tertiary butyl alcohol (TBA)	mg/L				0.01200	
1,2,3-Trichloropropane (1,2,3-TCP)	mg/L				0.00001	
1,2,4-Trimethylbenzene	mg/L				0.33000	
1,3,5-Trimethylbenzene	mg/L				0.33000	
2,4,6-Trinitrotoluene (TNT)	mg/L				0.00100	
Vanadium	mg/L				0.05000	
Alachlor	mg/L				0.00200	
Atrazine	mg/L				0.00100	
Bentazon	mg/L				0.01800	
Benzo(a)pyrene	mg/L				0.00020	
Carbofuran	mg/L				0.01800	
Chlordane	mg/L				0.00010	
Dalapon	mg/L				0.20000	
1,2-Dibromo-3-chloropropane (DBCP)	mg/L				0.00020	

Parameter	Unit of Measure[1-7]	Annual Average[9]	Minimum Monthly Average[10,11]	Maximum Monthly Average[10,12]	Maximum [14]	Peak Hour
2,4-Dichlorophenoxyacetic acid (2,4-D)	mg/L				0.07000	
Di(2-ethylhexyl)adipate	mg/L				0.40000	
Di(2-ethylhexyl)phthalate (DEHP)	mg/L				0.00400	
Dinoseb	mg/L				0.00700	
Diquat	mg/L				0.02000	
Endrin	mg/L				0.00200	
Endothal	mg/L				0.10000	
Ethylene dibromide (EDB)	mg/L				0.00005	
Glyphosate	mg/L				0.70000	
Heptachlor	mg/L				0.00001	
Heptachlor epoxide	mg/L				0.00001	
Hexachlorobenzene	mg/L				0.00100	
Hexachlorocyclopentadiene	mg/L				0.05000	
Lindane	mg/L				0.00020	
Methoxychlor	mg/L				0.03000	
Molinate	mg/L				0.02000	
Oxamyl	mg/L				0.05000	
Pentachlorophenol	mg/L				0.00100	
Picloram	mg/L				0.50000	
Polychlorinated biphenyls (PCBs)	mg/L				0.00050	
Simazine	mg/L				0.00400	
2,4,5-TP (Silvex)	mg/L				0.05000	
2,3,7,8-TCDD (dioxin)	mg/L				$3x10^{-8}$	
Thiobencarb	mg/L				0.07000	
Toxaphene	mg/L				0.00300	
Total Trihalomethanes	mg/L				0.08000	
Bromodichloromethane	mg/L				0.0010	
Bromoform	mg/L				0.0010	
Chloroform	mg/L				0.0010	
Dibromochloromethane	mg/L				0.0010	
Haloacetic Acids (five) (HAA5)	mg/L				0.06000	
Monochloroacetic Acid	mg/L				0.0020	
Dichloroacetic Acid	mg/L				0.0055	
Trichloroacetic Acid	mg/L				0.0073	
Monobromoacetic Acid	mg/L				0.0010	

Parameter	Unit of Measure[1-7]	Annual Average[9]	Minimum Monthly Average[10,11]	Maximum Monthly Average[10,12]	Maximum [14]	Peak Hour
Dibromoacetic Acid	mg/L				0.0010	
Bromate	mg/L				0.01000	
Chlorite	mg/L				1.00000	
Gross alpha particle activity	pCi/L				15.00000	
Gross beta particle activity	pCi/L				4.00000	
Radium-226	pCi/L				0.05000	
Radium-228	pCi/L				0.01900	
Radium-226 + Radium-228	pCi/L				5.00000	
Strontium-90	pCi/L				8.00000	
Tritium	pCi/L				20000	
Uranium	pCi/L				20.00	
Benzene	mg/L				0.001	
Carbon tetrachloride	mg/L				0.0005	
1,2-Dichlorobenzene	mg/L				0.6	
1,4-Dichlorobenzene (p-DCB)	mg/L				0.005	
1,1-Dichloroethane (1,1-DCA)	mg/L				0.005	
1,2-Dichloroethane (1,2-DCA)	mg/L				0.0005	
1,1-Dichloroethylene (1,1-DCE)	mg/L				0.006	
cis-1,2-Dichloroethylene	mg/L				0.006	
trans-1,2-Dichloroethylene	mg/L				0.01	
Dichloromethane (Methylene chloride)	mg/L				0.005	
1,2-Dichloropropane	mg/L				0.005	
1,3-Dichloropropene	mg/L				0.0005	
Ethylbenzene	mg/L				0.3	
Methyl tertiary butyl ether (MTBE)	mg/L				0.013	
Monochlorobenzene	mg/L				0.07	
Styrene	mg/L				0.1	
1,1,2,2-Tetrachloroethane	mg/L				0.001	
Tetrachloroethylene (PCE)	mg/L				0.005	
Toluene	mg/L				0.15	

Parameter	Unit of Measure[1-7]	Annual Average[9]	Minimum Monthly Average[10,11]	Maximum Monthly Average[10,12]	Maximum [14]	Peak Hour
1,2,4-Trichlorobenzene	mg/L				0.005	
1,1,1-Trichloroethane (1,1,1-TCA)	mg/L				0.2	
1,1,2-Trichloroethane (1,1,2-TCA)	mg/L				0.005	
Trichloroethylene (TCE)	mg/L				0.005	
Trichlorofluoromethane (Freon 11)	mg/L				0.15	
1,1,2-Trichloro-1,2,2-Trifluoroethane (Freon 113)	mg/L				1.2	
Vinyl chloride	mg/L				0.0005	
Xylenes	mg/L				1.75	
Bromide	mg/L	0.34			0.50	

[PCO 056]

Footnotes:

1. Flow units:
    a. MGD = million gallons per day
2. Concentration units:
    a. mg/L = milligrams per liter;
    b. mg-N/L = milligrams per liter as Nitrogen;
    c. mg-P/L = milligrams per liter as Phosphorus
3. Mass Load Units:
    a. lb/d = pounds per day (calculated using on concentration and flow);
    b. lb-N/d = pounds nitrogen per day;
    c. lb-P/d = pounds phosphorus per day.
4. S.U. = standard units
5. ^{o}C = degrees centigrade
6. µS/cm = microsiemens per centimeter
7. pCi/L = picocuries per liter
8. Influent samples shall be collected as composite samples. A composite sample is a flow-weighted combination of no fewer than eight (8) individual samples obtained at equal time intervals over a 24-hour period. The volume of each individual sample collected is proportional to the flowrate at the time of sampling.
9. Annual average is the arithmetic average of the total number of data collected in a calendar year.
10. The monthly average is the arithmetic mean of the daily concentrations over a calendar month.
11. Minimum Monthly Average is the minimum value of the monthly average in a calendar year.
12. Maximum Monthly Average is the maximum value of the monthly average in a calendar year.
13. Maximum day flow and load incorporates a maximum day flow and a maximum day load. The maximum day flow is the maximum daily total flow in a calendar year. The maximum day load for a particular parameter is the largest amount received in the influent during a continuous 24-hour period expressed as a weight per day.

14. Maximum is the maximum concentration value of any composite sample in a calendar year.

1.5 General Requirements

1.5.1 Overarching Requirements

DB to submit written results from all testing, analyses, and studies required in this Scope of Work or in Contract Documents.

Item	Parameter	Criteria	Notes
1	Integrated Design	The WRF must meet all requirements as an integrated facility and as a whole	
2	Overall Guarantees	• See Performance Guarantees Section	
3	Equipment Warranty Period	• Unless longer warranty requirements are specified in the contract documents, all equipment warranties shall be valid and in effect for 1 year after project substantial completion regardless of manufacturer's stated warranty start date	
4	Confined Spaces	• Minimize confined spaces in design • Identify all confined spaces and provide three sets of necessary gear for entry by O&M staff	
6	Transitional Operation Period	• Operate and maintain the WRF to: o Maximize the amount of recycled water produced o Minimize costs, and in any case keep power use, chemical use, operator attendance and other costs and inputs to below guaranteed values	
7	Material of Construction/Durability	• Select material of construction to meet the life cycle performance criteria • Include corrosion as a main criterion in detailed design	

1.6 Effluent Quality Requirements

This section summarizes the effluent quality requirements for the project.

1.6.1 Ocean Discharge Requirements

The effluent from the WRF discharged to the Ocean will meet the requirements for Effluent Limitations – Discharge Point No. 001 set forth in National Pollution Discharge Elimination System (NPDES) No. CA0047881, Draft Order No. R3-2017-0050 adopted by the Central Coast Water Board on December 7, 2017 with compliance measured utilizing the effluent composite sample collected at the Morro Bay WRF site.

1.6.2 Potable Reuse Requirements

Finished water quality for the new potable reuse facility must meet all Maximum Contaminant Level (MCL) and secondary MCL values found in SWRCB (2015) and notification level (NL) requirements from the State of California (https://www.waterboards.ca.gov/drinking_water/certlic/drinkingwater/documents/notificationlevels/notification_levels_response_levels_overview.pdf)

Specifically excluded is compliance with the MCL value for Bromate, which may not be met at all times depending on incoming water quality. The City directed operational method for the UV system with only one UV reactor, there will be operational periods when the optimum UV dose will be less than the minimum dose of the UV reactor (i.e., below the maximum turn down of the reactor). As a result, over dosing will occur. BV has determined that the potential levels of bromide in the source water could result in the creation of bromate in the product water, potentially exacerbated by UV overdosing, at concentrations which exceed the regulatory MCL. To address this concern the City has directed BV to include a shutdown interlock based on the conductivity reading in instrument 51-RO-AIT-0001 located on the common RO influent line. The City is conducting a study to determine the trigger conductivity level on this instrument that if exceeded the control system will automatically shut down the AWT system and divert flows to the outfall. The AWT system will not be permitted to restart until conductivity falls below a reset level determined by the City. The City will solely be responsible for determination of an appropriate level and monitoring of the system both during start up and normal operation to ensure bromate concentrations do not exceed the allowable MCL.

Bromate formation can be mitigated with the addition of ammonia in the UV reactor influent, as demonstrated at the Terminal Island project. Therefore, BV has recommended that an ammonia feed point be added upstream of the UV reactor. The City has determined not to add the ammonia feed system to this location at this time; however, a spare chemical feed duct is being provided that will run from the chemical building to upstream of the UV reactor. If at a later date the City should decide to add this feed system in then, this duct will facilitate the addition of a chemical dosing line and a chemical feed pump (the same pump size as the ones used for other chemicals) to reduce bromate formation at the UV reactor. [PCO 042] [PCO 056]

FBV will provide the City with a Table summarizing the virus, giardia and cryptosporidium log removal performance expectations for the three key treatment processes (i.e., MBR, RO, and UV as part of the Basis of Design (30%) deliverable.

1.7 Treatment Capacity

The WRF shall be designed to receive and treat the full influent wastewater flows from the City of Morro Bay in accordance with the effluent requirements described above. Available information on the anticipated influent wastewater flows and water quality characteristics is provided herein.

1.8 Plant Production Requirements

The WRF shall be designed and constructed to produce a volume of recycled water for indirect potable reuse groundwater injection equal to 76% of the influent flow based on the annual average flow in Section 1.4, assuming continuous operation of the IPR system. This production percentage does not account for down time due to maintenance of the UV system or periods of diversion when the Bromate MCL cannot be maintained. These periods of AWT downtime will reduce the production capacity. [PCO 042] [PCO 056]

1.9 Durability Requirements

The objective design life requirements for the different project components are listed below. The DB shall consider the location of the project in the coastal environment when selecting materials, coatings and equipment. The DB may consider the project components and facilities will be operated and maintained by qualified staff. The necessary maintenance, repair and replacement will also occur in accordance with warranty requirements and other procedures specified by the DB and equipment manufacturers.

Item	Parameter	Criteria	Notes
1	Overall WRF Design Life	30 Years	
2	Civil Component	• Pavement: 15 years • Site Fencing: 15 years • Concrete Structures, Tanks, etc.: 75 years • Chemical Storage Tanks: 20 years	
3	Mechanical Components	• Yard/Buried Piping: 50 years • In-Plant/Aboveground Piping: 30 years • Chemical Piping: 10 years • Chemical Pumps: 10 years • Pumps: 30 years • Control Valves: 25 years • Blowers: 25 years • Pressure Vessels: 30 years • Cartridge Filter Vessels: 30 years • Cartridge Filters: DB to define • Pressure Vessels: 30 years • UV Reactors: 30 years • UV System Components i.e., lamps, ballasts, etc.: DB to define • RO System: 30 years • AOP System: 20 years • HVAC Systems: 25 years	• Durations assume regular maintenance, calibration, testing and certification per manufacturer's recommendations • Unless longer warranty requirements are specified in the contract documents, all equipment warranties shall be valid and in effect for 1 year after project substantial completion regardless of manufacturer's stated warranty start date
4	Structural	• Building Structure: 50 years • Structural Steelwork: 50 years • Membrane Skid Frame: 50 years • Pre-treatment System Structures: 50 years	

Item	Parameter	Criteria	Notes
		• RO Skid Frame: 50 years • AO Skid Frame: 50 years • Metalwork, i.e. ladders, stairs and walkways: 25 years	
5	Electrical and I&C Components	• Motor Control Center: 30 years • Switchgear: 30 years • Dry-Type Transformer(s): 30 years • Instruments: 15 years (or as customarily available for standard industry instrumentation) • PLC System: 15 years • SCADA Hardware: 15 years • Electrical, general: 25 years • Telemetry: 25 years • Power electronics i.e. VFDs, UPS, etc.: 15 years	• Durations assume regular maintenance, calibration, testing and certification per manufacturer recommendations. Assumes all firmware and software updates are implemented when released. All systems with battery-backup batteries will be replaced as necessary • All equipment warranties will be in effect for 1 year after project substantial completion regardless of manufacturer's warranty to the DB

1.10 Anticipated Environmental Mitigation Measures

The environmental analysis and CEQA documents are currently being prepared. The Draft Environmental Impact Report (EIR) is anticipated to be available in March 2018, with certification of the final EIR was finalized in June 2018. Refer to Attachments for additional information and anticipated mitigation measures.

1.11 Process Performance Guarantees

This section presents the process systems design envelope and process treatment performance guarantees for the Morro Bay WRF designed and constructed by the FBV JV. The verification period is defined under Acceptance Testing in Section 12.5.

1.11.1 Conditions of the Process Treatment Performance Guarantee

The Process Treatment Performance Guarantees presented in this section are subject to the following:

- The influent water quality shall fall within the design envelope listed in Table 1-1.
- The influent shall contain no constituents, listed or unlisted, regulated or unregulated, which are deleterious or harmful to, inhibit, alter or interfere with any of the treatment processes of the Morro Bay WRF.
- Development, completion, implementation or reporting of any occurrence studies related to the presence of regulated, unregulated, indicator or surrogate compounds in the collection or sewer system is not included the scope of FBV and shall not form any part of the Work under the Contract.

Any such efforts required for regulatory or permit compliance are to be completed by the City of Morro Bay.

- Operation and maintenance of all systems, equipment, and components of the Morro Bay WRF must be in accordance with FBV Operations and Maintenance manuals and/or guidelines and/or requirements and/or recommendations and manufacturer system/equipment manufacturers' manuals and recommendations.
- The City of Morro Bay is responsible for implementing an effective Enhanced Source Control Program in accordance with 22 CCR § 60320.206, 22 CA ADC § 60320.206. The Enhanced Source Control program shall be developed by the City of Morro Bay and approved by California State Water Resources Control Board Division of Drinking Water prior to the startup and commissioning of the Morro Bay WRF.

1.11.2 Water Quality Guarantees

1.11.2.1 Ocean Discharge Effluent Quality

Ocean Discharge Effluent Quality will be demonstrated to meet the quality set forth in Section 1.6.1 during the 14-day Acceptance Testing period . In the event that any of the Ocean Discharge Effluent Quality criteria are not met during the 14-day Acceptance Testing period due to:

1. Failure of the City to provide influent water which meets the conditions specified in Table 1-1 of Section 1.4; or
2. Failure of the City to operate and maintain the Morro Bay WRF in accordance with FBV Operations and Maintenance manuals and/or guidelines and/or requirements and/or recommendations and manufacturer system/equipment manufacturers' manuals and recommendations,

FBV shall demonstrate that one or both of the above conditions resulted in the failure. If neither of these reasons were the cause of the failure then the 14-day Acceptance Testing shall be redone at no cost to the City in accordance with Section 12.5. If it is determined either of these conditions were the cause of the failure, then the City shall be responsible for all costs associated with the additional 14-day Acceptance Testing period. If the City cannot meet these conditions during the retest, then FBV shall be deemed to have met all water quality guarantees as of the date the Acceptance Testing period began.

1.11.2.2 Groundwater Recharge Effluent Quality

Groundwater Recharge Effluent Quality will be demonstrated to meet the limits expressly set forth in Section 1.5.2 during the 14-day Acceptance Testing period. In the event that any of the Groundwater Recharge Effluent Quality criteria are not met during the 14-day Acceptance Testing period due to:

1. Failure of the City of Morro Bay to provide influent water which meets the conditions specified in Table 1-1 of Section 1.4;
2. Failure of the City of Morro Bay to operate and maintain the Morro Bay WRF in accordance with FBV Operations and Maintenance manuals and/or guidelines and/or requirements and/or recommendations and manufacturer system/equipment manufacturers' manuals and recommendations,

FBV shall demonstrate that one or both of these conditions were the cause of the failure. If neither of these conditions were the cause of the failure, then the 14-day Acceptance Testing shall be recompleted at no cost to the City in accordance with Section 12.5. If it is determined that either of these conditions were the cause of the failure, then the City shall be responsible for all costs associated with the additional 14-day Acceptance Testing period. If the City cannot meet these conditions during the retest, then FBV shall be deemed to have met all water quality guarantees as of the date the Acceptance Testing period began.

1.11.3 Dewatered Solids Guarantees

1.11.3.1 Dewatered Sludge Solids Concentration Guarantee

Dewatered sludge dry solids quality will meet a minimum monthly average solids concentration of 16%. In the event that any of the Dewatered Sludge Dry Solids criteria are not met during the 14-day Acceptance Testing period due to:

1. Failure of the City of Morro Bay to provide influent water which meets the conditions specified in Table 1-1 of section 1.4;
2. Failure of the City of Morro Bay to operate and maintain the Morro Bay WRF in accordance with FBV Operations and Maintenance manuals and/or guidelines and/or requirements and/or recommendations and manufacturer system/equipment manufacturers' manuals and recommendations,

FBV shall demonstrate that one or both of these conditions were the cause of the failure. If neither of these conditions were the cause of the failure, then the 14-day Acceptance Testing shall be recompleted at no cost to the City in accordance with Section 12.5. If it is determined that either of these conditions were the cause of the failure, then the City shall be responsible for all costs associated with the additional 14-day Acceptance Testing period. If the City cannot meet these conditions during the retest, shall be deemed to have met all solids concentration guarantees as of the date the Acceptance Testing period began.

1.11.3.2 Dewatering Process Solids Capture Efficiency

The Dewatering process solids capture efficiency will meet a minimum monthly average of 95%. In the event that the Dewatering Process Solids Capture Efficiency criteria is not met during the 14-day Acceptance Testing period due to:

1. Failure of the City of Morro Bay to provide influent water which meets the conditions specified in Table 1-1 of Section 1.4;
2. Failure of the City of Morro Bay to meet all the stipulations noted in "Conditions of the Process Treatment Performance Guarantee"; or
3. Failure of the City of Morro Bay to operate and maintain the Morro Bay WRF in accordance with FBV Operations and Maintenance manuals and/or guidelines and/or requirements and/or recommendations and manufacturer system/equipment manufacturers' manuals and recommendations,

FBV shall demonstrate that one or both of these conditions were the cause of the failure. If neither of these conditions were the cause of the failure, then the 14-day Acceptance Testing shall be recompleted at no cost to the City in accordance with Section 12.5. If it is determined that either of these conditions were the cause of the failure, then the City shall be responsible for all costs associated with the additional 14-day Acceptance Testing period, if the City cannot meet these conditions during the retest, shall be deemed to have met all process solids capture efficiency guarantees as of the date the Acceptance Testing period began.

1.12 [PCO 064]

SECTION 2 TREATMENT PROCESS CRITERIA

2.1 General

The WRF shall provide preliminary, secondary, tertiary, and full advanced treatment, with processes integrated to work as a whole and with operational flexibility to provide efficient treatment. The main treatment processes are summarized in the table below. Ancillary support facilities will also be required. A basic process flow diagram (PFD) is included in the drawings.

Item	Process	Notes
1	Influent (Coarse) Screening	
2	Grit Removal	
3	SAFE System (auxiliary peak flow treatment)	
4	Fine Screening	
5	Membrane Bioreactor (MBR)	
6	Sludge Holding Tanks (formerly referred to as Aerobic Sludge Digester)	
7	Sludge Dewatering	
8	Reverse Osmosis (RO)	
9	Ultraviolet Advanced Oxidation Process (UVAOP)	
10	Chemical Storage and Feed Facilities	
11	Odor Control	

The WRF treatment processes shall be integrated to work as a whole. Control systems throughout the WRF Treatment Processes shall be compatible with the overall site control system. Process monitoring shall be provided to allow for full regulatory compliance, monitoring, and recording of water quality and flow trends, evaluation of unit process performance, and evaluation of equipment condition.

2.2 Influent (Coarse) Screening

The Influent (Coarse) Screening System shall collect, wash, dewater, compress, convey, bag, and discharge solids to a rolling dumpster. Discharge area is to be paved with curbs and drainage to the WRF plant drain system. Two packaged headworks units shall be provided. This section covers the coarse screen components of the packages. The packaged headworks shall utilize OEM packaged equipment as detailed below and on the P&IDs.

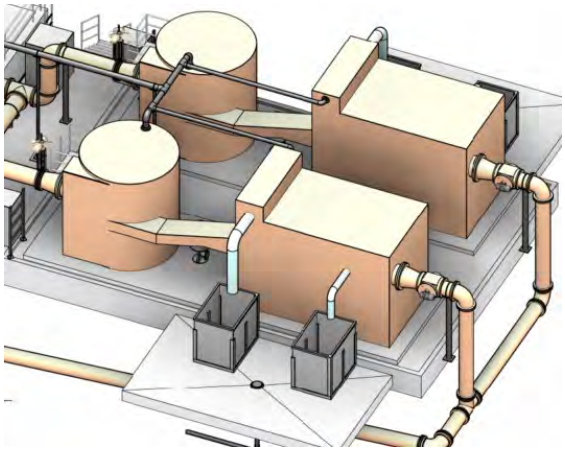

Key Overall Facility Features

- Two Packaged Headworks Systems shall be furnished, each rated at full plant peak hour capacity of 8.14 mgd. 1 duty / 1 standby.
- Each package headworks includes mechanically cleaned coarse screening and grit removal.
- Coarse screening includes screens, washer/compactors, conveyor to dumpster, and odor control.
- Skid mounted metal channels and tank construction. 316 stainless steel construction of wetted components or tankage [clarification].
- Automated isolation valves for each Packaged Headworks System. [PCO 040.1]
- 2 feet of freeboard.
- Built-in bypass/overflow around the coarse screens directly to the grit removal system.
- Fully covered channels and tanks for odor control in compliance with section 2.12 Odor Control.
- Galvanized ship's ladder to access units in lieu of ladders offered with package. [PCO 031] [clarification]
- Curb surrounding Packaged Headworks Systems and floor drain [PCO 046]
- Manufacturer: Kusters Zima, Huber, Lakeside Equipment, Vulcan, Headworks Inc., Westech, Parkson, Duperon, Hydrodyne, or equal if approved.

Equipment (Package Headworks)- Coarse Screens

- 2 screens @ 8.14 mgd each, one in each package. 1 duty / 1 standby at peak hour flow.
- ¼" (6 mm) bar spacing, 316 stainless steel.
- Furnished by packaged headworks manufacturer as part of the package.

Equipment (Package Headworks)- Washer/Compactor/Conveyor

- 2 washer/compactors, one for each package, integrated into each coarse screen.
- 316 stainless steel wetted components.
- Integrated Screw-auger conveyor included for each package.

- Discharge to dumpster. Bagging attachment included on chute. A 4-yard is anticipated for weekly disposal based on published debris loading rates. Dumpster to be provided by hauling company.
- Furnished by packaged headworks manufacturer as part of the package.

Control Features

- Local control panel by Packaged Headworks System manufacturer with Plant PLC start/stop and monitoring.
- Operators shall manually select which unit(s) operate and leave them running continuously.
- Local control panel for each Packaged Headworks System initiates operation of rake, washer/compactor, and conveyor.
- No operator intervention required for bypass or overflow of coarse screens. Operator intervention required for bypass or overflow of the Packaged Headworks System.

Operations Purpose

The coarse screens collect and remove suspended debris and solid material from the plant influent flow stream to protect the plant equipment. Screenings are delivered to a washer compactor. Plant water is used to wash the screenings which removed soluble organics from the screenings which are utilized in the MBR. The unit compacts the screenings and deposits the material into a screenings container.

Operations Description

The plant influent includes flow from the influent main and the plant drain system. Plant drain flow is metered separately.

Coarse Screens

Wastewater enters the headworks and can be directed to Coarse Screen No. 1 or No. 2. Wastewater passes through the bar rack while solids are captured in the rack. Automatic screen operation is based on differential level and time. The cleaning rakes are driven by the chains and travel upwards transporting the screenings upwards along the apron which comes after the bar rack. A hinged wiper pushes the screenings from the rake shelf over the discharge chute and directs them to the washer compactor.

Screen control is set through the local control panel (LCP). With the control selector switch in the Auto position the screen will be operate based on level control and/or time control. In Hand screen operation is controlled locally using the Forward and Reverse switches. Rake speed can be adjusted locally and speed viewed on the LCP. The screen will shut down on high toque, motor overload and if the E-Stop is pressed. Screen status, operating mode and alarms are transmitted to SCADA thru the PLC.

Level Control

Water level is measured upstream and downstream of the screens. When a preset differential level is reached a raking event starts at a preset low speed setpoint. In the event a high-high level is reached the screen speed will increase to the high speed setpoint. The rake high speed control has an adjustable delay timer.

Timer Control

A programmable timer is used to initiate raking events. During periods of low flow the rake may not reach levels high enough to trigger an event. A 24 hour programmable timer can be set to periodically operate the rake to make sure that screenings stay fresh.

Washer Compactor

Washer compactor operation is interlocked with the screen rake. Compactor control is set locally. With the control selector switch in the Auto position the compactor starts when a screening event is initiated. The spray water solenoid valves opens and the compactor starts and runs forward for a preset time period. Compacted material is discharged into a screenings discharge chute that holds a screenings bag. When full the bag is dropped into the screenings container. In Hand the washer compactor operation is controlled locally using the Forward and Reverse switches. The unit will shut down on low spray water pressure and when the E-Stop is pressed. Compactor status, operating mode and alarms are transmitted to SCADA thru the PLC.

Normal Operation

Normally one screen is selected for use in Remote Auto control.

Alternate Operations

1. If Coarse Screen No. 1 fails in Remote Auto Manual the unit may be operated from SCADA by selecting Remote Manual and cycling the screen. This option requires manual operation of the compactor.
2. If Coarse Screen No. 1 fails in Remote Auto the unit may be operated locally using the local control selector switch.
3. If Coarse Screen No. 1 should fail the Operator can open the influent valve from SCADA to the Coarse Screen No. 2 and close the valves to Coarse Screen No. 1. Coarse Screen No. 2 controls will be placed in Remote Automatic. [PCO 040.1]

2.3 Grit Removal

The Grit Removal System shall remove grit from influent wastewater and discharge collected grit via automated valve(s) or pumps to a grit dewatering and conveyance system. Grit discharge area is to be paved with curbs and drainage to the WRF plant drain system. The distance from grit removal system to dumpsters shall be minimized to minimize conveyance system failures. Two packaged headworks units shall be provided. This section covers the vortex grit removal components of the packages. The packaged headworks shall utilize OEM packaged equipment as detailed below and on the P&IDs.

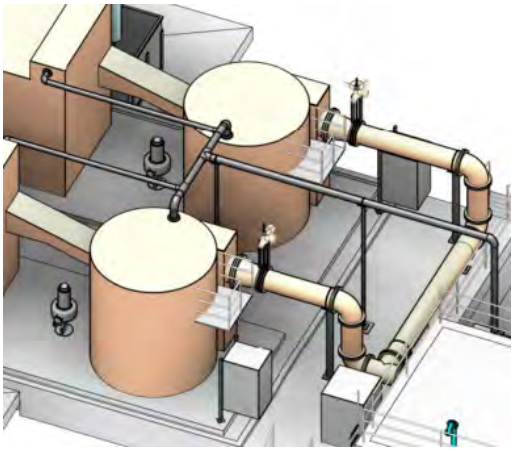

Key Overall Facility Features

- Two Packaged Headworks Systems, 1 duty / 1 standby. Shall include coarse screening and grit removal.
- Grit removal shall include vortex grit removal, washer/classifiers, conveyor to dumpster, and odor control.
- Channels and tanks shall be skid mounted, 316 stainless steel construction.
- Electrically actuated isolation valves for each Packaged Headworks System. [PCO 040.1]
- 2 feet of freeboard.
- Bypass/Overflow around both Packaged Headworks Systems by isolating both headwork systems to cause flow to flow directly to the flow splitter box.
- Fully covered channels and tanks for odor control per Section 2.12.
- Galvanized stairs to access units in lieu of ladders offered with package. [PCO 031]
- Manufacturer: Kusters Zima, Huber, Lakeside Equipment, Westech, Fluidyne, Smith and Loveless, Hydro International, or equal if approved.

Equipment (Package Headworks)- Vortex Grit Removal

- 2 vortex grit units @ 8.14 mgd each. One per Packaged Headworks System. 1 duty / 1 standby at peak hour flow.
- 316 stainless steel tank and components.
- Removal Rate @ 0.97 MGD: ≥ 50 Mesh = 95%; 50-70 Mesh = 95%; 80-100 Mesh = 65%.
- Furnished by packaged headworks manufacturer as part of the package.

Equipment (Package Headworks)- Grit Pump

- 2 pumps total, one integrated into each Packaged Headworks System. 1 duty/1 standby.
- Flow per Packaged Headworks System Supplier
- Shall discharge into grit removal washer/classifier.

- Shall be furnished by packaged headworks manufacturer as part of the package.

Equipment (Package Headworks)- Washer/Classifier/Conyeyor

- 2 units total, one integrated into each Packaged Headworks System. 1 duty/1 standby.
- 316 stainless steel wetted components.
- Screw-auger conveyor.
- Discharge to dumpster. A 4-yard is anticipated for weekly disposal based on published debris loading rates. Dumpster shall be provided by hauling company.
- Furnished by packaged headworks manufacturer.

Control Features

- Local control panel by Packaged Headworks System manufacturer with Plant PLC start/stop and monitoring.
- Operators shall manually select which unit(s) operate and leave them running continuously.
- Local control panel for each Packaged Headworks System shall initiate operation of paddle, grit pump, washer/classifier, and conveyor.
- Operator intervention shall be required for bypass or overflow of the Packaged Headworks System.

Operations Purpose

Grit consists of inorganic material, such as sand, silt, and gravel. The grit removal system consists of a vortex grit basin, two grit pumps and a grit separator and classifier. Grit is removed from the wastewater to prevent damage to equipment and piping and the reduction of tank volume.

Operations Description

Grit Basin

The grit basin inlet flume produces a straight laminar flow that minimizes turbulence at the inlet of the basin. Grit already at the bottom of the flume follows a ramp at the end of the inlet flume to the floor of the basin. The inlet baffle at the end of the flume helps the incoming flow to properly merge with the circular flow already inside the grit basin. The configuration of inlet flume, inlet baffle, and rotating paddle generates the toroidal flow pattern required for proper operation of the flat floored vortex grit basin.

The toroidal flow pattern moves water upward through the vortex at the center of the basin, across the surface of the water toward the outer wall, down the outside wall toward the floor, and across the floor back to the center again. Wastewater is also flowing simultaneously with the toroidal flow around the basin in a circular flow pattern. The combined effect of the two flow patterns retains grit in the basin for more than one circular rotation around the basin, effectively increasing the amount of time grit is retained in the basin, thus increasing the opportunity for grit to be captured on the floor.

The settled grit migrates toward the center of the hopper and falls into the grit storage hopper. The shaft on which the rotating paddles are attached extends only to the bottom of the separation basin.

Grit Pumps

One centrifugal pump operates periodically to remove grit slurry from the hopper.

Grit Separator and Classifier

The grit separator separates the pumped grit from the carrier water. The separator works on the principal of centrifugal force. The grit pump discharges settled grit slurry and some organics into the separator at a controlled rate. The slurry enters the separator tangentially near its upper perimeter. The round shape of the separator imparts a circular motion inside the unit. The heavier grit is forced to the outside of the cone and moves down the sides, falling into the grit classifier below the separator. The carrier water and lighter organics exits the separator at the top of the cone to return to the grit basins.

The grit classifier separates the grit from the organics and consists of an inclined tank with an inclined screw. The grit and organics fall from the grit concentrator into the tank, where it is washed using plant effluent water. The water flow rate through the tank is sufficient to carry the lighter organics out the settling basin overflow weirs to return to the in-plant drain while permitting the heavier grit to settle to the bottom of the tank. The grit is carried up the inclined screw allowing the grit to dewater before falling into a grit hopper for offsite disposal.

Normal Operation

Grit Basin: On-line

Grit Basin Paddle: Run continuously.

Grit Pump: Runs periodically based on preset timer.

Grit Separator and Classifier: Starts 5 minutes before grit pump runs and continues running for a preset time period after the grit pump stops.

Grit Container: Manual

2.4 SAFE System (section was formerly titled Flow Equalization Basin)

Peak flows shall be treated with a peak flow auxiliary treatment system, referred to in the proposal as the SAFE system. The SAFE System is comprised of a diversion box which sends flows in excess of the MBR capacity to the SAFE Settle Tank. When the SAFE Settle Tank fills, the effluent passes over a weir to the SAFE Filter. Effluent from SAFE Filter system shall be routed to the Outfall Balancing Tank. The SAFE Settle Tank can be pumped back to the SAFE Box for treatment through the MBR System after the peak flow event ends. This system replaces the functionality of a flow equalization basin by treating peak flows at their influent rate, rather than requiring them to be stored for treatment at a lower rate later. [PCO 017] [clarification]

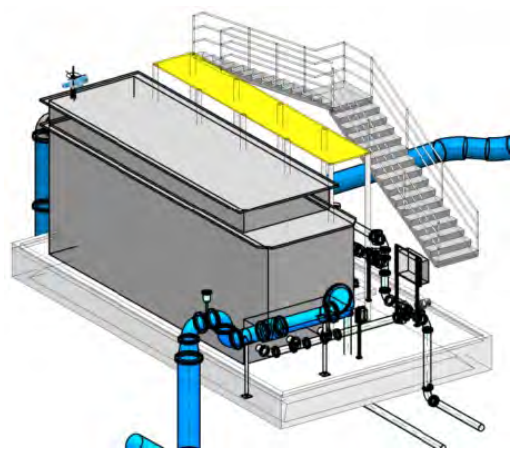

Key Overall Facility Features

- SAFE System Box included at headworks to divert any flows in excess of the MBR capacity to the SAFE system for treatment. [clarification]
- Odor control, cover, ladder and handrail for SAFE Box. [PCO 004] [PCO 026] [clarification]
- SAFE Settle Tank, a 100,000-gallon concrete basin adjacent to the Sludge Holding Tanks, provides equalization of peak flows so that the SAFE Filter only treats storm flows. [PCO 017]
- Dedicated Piping to drain the SAFE Settle Tank and use the solids dewatering pump to drain manually [PCO 017] [PCO 068]
- 1 SAFE System Unit
  - 1 disk backwash pump
  - 1 sludge pump
  - Backwash and sludge pumps intertied for shared manual redundancy
  - Cloth media disks for BOD removal and filtration
  - Scum box for scum removal
  - Access platform and staircase to the top of the SAFE Filter in lieu of a ladder. [PCO 044.1]
- Peak flows shall be treated through the SAFE system and routed to the Outfall Pump Station.
- Manufacturer: Aqua-Aerobic Systems Inc., Veolia, or equal if approved.

Equipment – SAFE System

- 1 @ 6.26 mgd each (plant peak hour flow of 8.14 mgd less MBR capacity of 1.88 mgd).
- Stainless Steel tank to house disks and appurtenances.
- 1 backwash pump, approx. 51 ft TDH
- 1 solids pump, approx. 51 ft TDH
- Backwash and solids pumps will be interconnected to allow either to be used for either operation in event one pump is out of service.

- Electrically actuated plug valves to control sludge, scum and backwash operations and control appurtenances on the SAFE Filter [clarification]
  - Pressure transducer
  - Float Switch
  - Vacuum transmitters
- Provide removable cover system over the Cloth media disc tank for UV/weather protection. Control Features
- Local control panel by SAFE System manufacturer with Plant PLC start/stop and monitoring.
- Flow from headworks through influent flow meter shall automatically trigger the startup of the SAFE system.

Operations Purpose

Flows in excess of the treatment plant design capacity are diverted to the SAFE system for treatment.

Operations Description

The SAFE facility is a cloth media filtration system that provides primary treatment for wet weather applications. The disks are constructed of a pile cloth filtration media to effectively filter high solids waste streams without the use of chemicals under varying influent conditions.

Normal Operation

As needed. Flow from headworks through influent flow meter initiates the SAFE system startup.

Filtration Mode

Screened wastewater flow enters the filter by gravity and fill basin that contains stationary cloth media disks that are completely submerged. Solids deposit on the outside of the cloth media forming a mat as filtrate flows through the media. The tank liquid level rises as headloss builds due to the collection of solids. Filtrate is collected in the hollow center tube and discharged over an effluent weir. The heavier solids settle into a hopper located in the bottom of the tank.

Backwash Mode

Solids are backwashed at a preset liquid level or time. Backwash shoes directly contact the cloth media and solids are removed by vacuum pressure using a backwash pump. The disks rotate slowly and two disks are backwashed at a time. Filtration is not interrupted. Backwash water is directed the plant drain.

Solids Wasting Mode

Heavier solids are removed from the collection on an intermittent basis. Filter Solids Waste Pump.

Solids are pumped back to the Headworks Splitter Box.

Floatable Wasting Mode

Floatable scum is allowed to collect on the water surface. After a preset number of backwashes, the water level is allowed to rise above the preset high level and the scum flows over the scum removal weir. Scum wasting water is directed to the plant drain.

2.5 Fine Screening

The Fine Screening System shall collect, wash, dewater, compress, convey, and discharge solids to a rolling dumpster. Discharge area is to be paved with curbs and drainage to the WRF plant drain system. The distance and lift from screens to dumpsters shall be minimized to prevent conveyance system failures. Two packaged fine drum screen units shall be furnished in the Headworks Area to screen wastewater influent ahead of the MBR process. The packaged fine screens shall utilize OEM packaged equipment as detailed below and on the P&IDs.

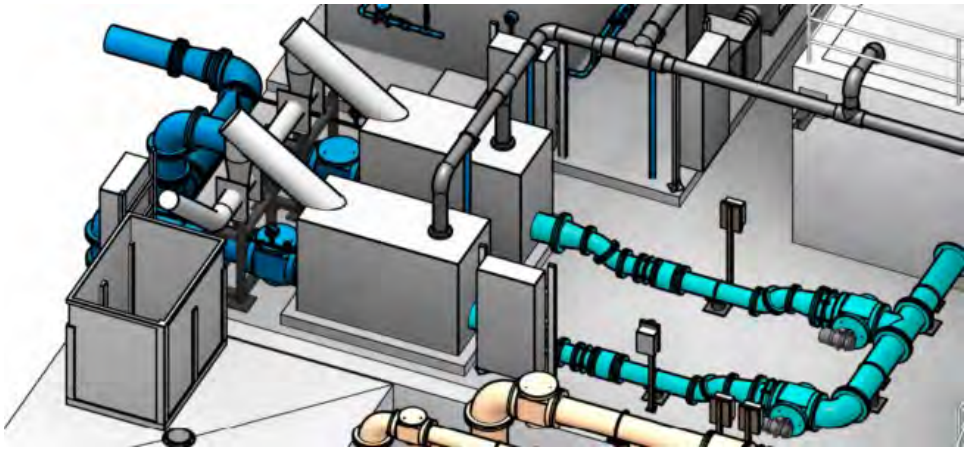

Key Overall Facility Features

- Fine screens shall be supplied from the SAFE System Diversion Box. An automated flow control valve and meter shall be included to regulate flow to the fine screens to the MBR treatment rate. [PCO 040.1]
- Two Packaged Fine screens with integrated washer/compactors and odor control. [PCO 004]
- Conveyor to convey screenings to dumpster.
- Manufacturer: Kusters Zima, Huber, Smith & Loveless, Vulcan, Headworks Inc, Westech, Parkson, Duperon, Hydrodyne, or equal if approved.

Equipment - Fine Screens

- Perforated plate drum screens in stainless steel tank with packaged washer/compactors.
- 2 unit @ 1.88 mgd each. 1 duty / 1 standby.
- 2 mm openings, 316 stainless steel.
- Furnished by fine screen manufacturer as part of package unit.

Equipment - Washer/Compactor

- 2 units total, one integrated into each fine screen package.
- 316 stainless steel wetted components.
- Furnished by fine screen manufacturer as part of package unit.

Equipment - Conveyor

- 1 unit, shared between both screening and washer/compactor units.
- Screw-auger conveyor
- 316 stainless steel wetted components.

- Discharge to dumpster. A 4-yard is anticipated for weekly disposal based on published debris loading rates. Dumpster to be provided by hauling company.
- Furnished by fine screen manufacturer as separately installed equipment.

Control Features

- Local control panel by screen manufacturer with Plant PLC start/stop and monitoring.
- Operators select which unit(s) operate and leave them running continuously. [PCO 040.1]
- Local control panel initiates operation of screen drum, washer/compactor, and conveyor.
- Control valve utilizes flow meter to maintain the MBR treatment flow capacity, maximum flow of 1.88 mgd through the fine screens. The valve is controlled directly by the Plant PLC and can be remotely or manually set to a position. [PCO 040.1]

Operations Purpose

Splitter Box flow is discharged to the fine screens through two lines. Trash and fibrous materials such as hair and paper found in domestic wastewater can hinder membrane performance and shorten membrane life. Fine screening captures these materials to prevent them from accumulating on the membranes and transfers the material to the conveyor and discharge chute and into the screenings container.

Operations Description

The fine screen is comprised of perforated plate with an integrated screenings press and screenings washing. Floating and suspended materials are retained by the screen basket.

The screenings and compactor local control panel (LCP) is energized from the MCC. With the control selector switch in the Hand position the screen runs continuously; in the Off position the screen does not rotate; in Auto control is passed to PLC and operation set through SCADA. Screen operation is set on the SCADA configuration screen including control mode (Remote Manual | Remote Auto), screen out of service and screen high level setpoint. Selecting a screen has out of service removes the equipment from the control loop and suppresses any alarms.

Water level is measured upstream and downstream of each screen. The basket starts to rotate when a preset upstream water level is exceeded due to screen surface blinding. The rotating screen drum lifts the screenings and drops them into the centrally arranged trough. Screenings removal from the drum is supported by a scraper brush and a spray nozzle bar. Plant effluent water (PEW) is supplied by a solenoid valves. In the event PEW pressure is low a pressure switch generates an alarm. A screw conveyor in the trough rotates with the drum and transports the screenings through a closed and inclined pipe. The conveying screw transports, dewaters and compacts the screenings, without any odor nuisance, and discharges them into the dumpster. Screened wastewater is combined in a pipeline that discharges to the MBR. Sodium hydroxide is added to the line for pH control and monitored for TSS and pH. An E-stop is located locally and the LCP. Energizing the E-Stop shuts down the equipment immediately and generates an alarm.

Specifics on the sodium hydroxide feed system are located in Section 2.11-Chemical Storage and Feed.

Normal Operation

One fine screen runs in Remote Auto. One unit shall be operated when the MBR is in service.

Abnormal Operation

- Fine Screen No. 1 shall be operated in Remote Manual.

- Fine Screen No. 1 shall be operated in Hand.
- Fine Screen No. 2 shall be placed in service. Open the manual supply and out let valves to Screen No. 2. Energize the LCP and place controls in in Auto. Inlet and outlet valves to Screen No. 1 should be shut. If possible run the screen to remove as much material as possible. Place Screen No. 1 controls in Off.

2.6 Membrane Bioreactor

A Membrane Bioreactor system shall be furnished to receive water from the Fine Screens and provide biological treatment and filtration to supply downstream IPR treatment system and produce effluent suitable of ocean discharge. This system shall be furnished as detailed below and as shown on the drawings and P&IDs. The MBR Filtration System shall utilize OEM packaged equipment as detailed in the table below and on the P&IDs.

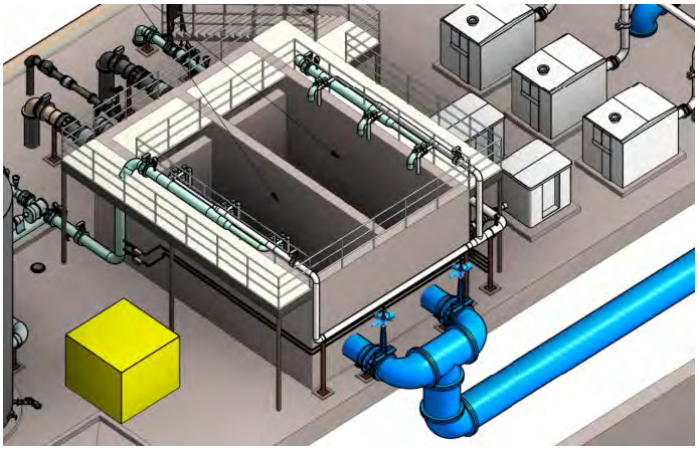

[PCO 005]

Key Overall Facility Features

- Two BNR process trains each with ability to treat max month flow of 1.16 mgd of screened and degritted wastewater with full redundancy. Max day flow of 1.88 mgd shall utilize both basins.
- MLSS shall be less than 8,000 mg/l in BNR basins and less than 10,000 mg/l in MBR tanks.
- MBR Filtrate shall have a turbidity of 0.5 NTU or lower.
- BNR basins shall utilize cast-in-place concrete construction.
- Staircases at the north and south ends of the BNR basins. [PCO 044.1]
- Total anoxic volume of 60,000 gallons. 30,000 gallons per train. [clarification]
- Total aerobic volume of 360,000 gallons. 180,000 gallons per train. Aerobic volume in each train shall be served by two diffuser grids. [clarification and PCO 067]
- 1.5 ft of in-basin equalization volume (aerobic) for a total volume of 26,670 gallons.
- BNR process air shall be supplied by positive displacement dry screw blowers. [PCO 23] Blowers are on Adjustable Frequency Drives to allow optimization of air flow.
- Manual isolation gates shall be provided for each treatment train.
- RAS deox volume of 12,500 gallons total furnished in the RAS pipe Deox Tank upstream of BNR inlet splitter. [clarification]
- Membrane Bioreactor System including:
  - Membrane cassettes and supporting structures.
  - Membrane filtrate pumps.

  [clarification]
  - Membrane filtrate collection / backpulse distribution headers.
  - Membrane tank drain pumps. (if required by system supplier)
  - Membrane scour air blowers.
  - Membrane scour air distribution headers.
  - Valves, instrumentation, magnetic flowmeters, and controls equipment for operation of MBR system.
  - Compressed air system for operation of MBR equipment (if required by system supplier)

  - Clean-in-place system via injection of citric acid or sodium hypochlorite into back pulse line. (not within MBR Supplier scope)
- Access staircase and catwalks on both sides of the MBR train in lieu of a ladder. [PCO 044.1]
- Surface wasting in BNR basins and post-MBR WAS collection with common WAS pumping wetwell. Selectively removes filamentous bacteria to optimize BNR operation.
- CIP provisions shall be furnished to perform maintenance and recovery cleanings at typical frequencies.
- Curbed washdown area to place a single dirty cassette and hose off and send drainage to sanitary sewer [PCO 046]
- BNR/MBR system designed to minimize FOG reaching MBR membranes.
- Manufacturer: Fibracast, Suez, Evoqua, Koch, or equal if approved.
- Regulatory Compliance: DDW approval letter for pathogen reduction credit is required.

Equipment – Anoxic Mixers

- 2 @ 2.5 hp each (to be optimized in design).
- Submersible, mast mounted or pumped mixing equipment
- Manufacturer: Sulzer, Flow Systems, or equal if approved.

Equipment – RAS Deox Mixer

- 1 @ 1 to 2.5 hp each (to be optimized in design).
- Submersible, mast mounted.
- Manufacturer: Sulzer, Flow Systems, or equal if approved.

Equipment – Fine Bubble Diffused Aeration

- Two aeration zones per train.
- 1,040 scfm maximum Zone 1 airflow (per train). Minimum 220 diffusers (per train). [PCO 067]
- 650 scfm maximum Zone 2 airflow (per train). Minimum 160 diffusers (per train). [PCO 067]
- EPDM membrane discs with PVC components, fittings, manifolds, and laterals.
- Manufacturer: Xylem, Environmental Dynamics, Sanitaire, or equal if approved.

Equipment – BNR Process Blowers

- 3 @ 1,300 scfm each, 24.9 psia discharge pressure. 2 duty / 1 standby. [PCO 067]
- Target efficiency 75% or greater.
- Dry screw blower w/ weather enclosure and VFD/AFD. [PCO 023]
- Supplying air to fine bubble diffuser system. Air control, metering equipment, and logic included to control and optimize aeration.
- Manufacturer: Aerzen [PCO 023] [PCO30]

Equipment –MBR Feed Pumps

- 2 @ 4.85 mgd each, 2.5 ft TDH. [clarification]
- Horizontal, submersible propeller pump.
- Manufacturer: Sulzer, Flow Systems, or equal if approved.

Equipment – Mixed Liquor Collection Channel Scum Collection Weirs and Valves

- Concrete weir at the end of each BNR train to collect scum in a box
- Motorized plug valve to each box opens on timer to pull scum out

Equipment – BNR WAS and Scum Pumps

- 2 @ 40 gpm each, 25 ft TDH. 1 duty / 1 standby.
- Vertical, submersible centrifugal pump.
- Manufacturer: DXP, Xylem, Flygt, or equal if approved.

Equipment – Membrane Filtration System (specific equipment package subject to change based on MBR System Supplier requirements)

- 1.0 mgd annual average, 1.16 mgd max month, and 1.88 mgd max day treatment capacity. 10 gfd at annual average flow and 17 gfd at max month flow.
- Two minimum membrane trains. 805 gpm each.
- Membrane Cassettes
  - Integrated scour air distribution.
- Membrane Filtrate Pumps
  - 2 @ 830 gpm, 30ft TDH, to be confirmed by MBR System Supplier (MSS).
  - Vertical centrifugal pumps
  - Manufacturer selection by MBR Supplier.
- Membrane Tank Drain Pumps
  - 1 @ 250 gpm, 15ft TDH to be confirmed by MSS.
  - Vertical centrifugal pumps
  - Manufacturer selection by MBR Supplier.
- Membrane Scour Air Blowers
  - 4 @ 270 scfm, 6 psi. 3 duty / 1 standby, to be confirmed by MSS.
  - Target efficiency 75% or greater.
  - Rotary lobe blowers w/ weather enclosure.
  - Manufacturer:Aerzen [PCO 30]
- Compressed Air System
  - Complete with dryers, receiver tank, and control equipment.
  - Capacity requirements by MBR Supplier.
- Connections on MBR Supplier provided piping to accommodate CIP chemicals.

Control Features

- BNR Process Blowers
  - Local Control panels with Blower Master Control panel communication to SCADA.
  - System supplies/controls air based on DO control within aeration zones.
- MBR System
  - Local Control panels with MBR Master Control panel communication to SCADA.
  - Control of all MBR Supplier provided equipment is within the scope of Supplier.
- Anoxic/Deox Mixers
  - Operators manually select which unit(s) operate and leave them running continuously.
- MBR Feed Pumps
  - Operators manually select which unit(s) operate and leave them running continuously.
  - Pump speed to be varied based on filtrate and RAS flow. [clarification]
- WAS and Scum Pumps
  - Wetwell level control. Lead/lag selectable by Operator.
  - Scum Collection Control Valves
  - Operator definable duration and frequency in SCADA.

Operations Purpose

The MBR Area contains processes that accomplish secondary treatment and filtration. The purpose of the area is to convert dissolved and colloidal material to a product that can be separated from the liquid stream and to create an effluent (called permeate) suitable for the RO Facility.

Air is drawn through a set of filters to remove particulate matter.

Operations Description

Biological Reactor

Wastewater that has passed through the fine screens and return activated sludge (RAS) flows are combined at the Bioreactor Splitter Box. An oxygen reduction probe (ORP) is located in the Anoxic Basins and provides an indication of the environmental condition of the biomass (aerobic, anoxic, and anaerobic). Using manually operated gates the flow can be directed to either activated sludge (AS) train. Flow is directed into the anoxic (AN) zone. The anoxic zone is mixed gently to encourage contact between food and the biomass. In an anoxic environment the biomass uses combined oxygen (nitrate) as an energy source. This is an effective way to convert nitrate to nitrogen gas and reduce overall nitrogen. The anoxic zone denitrifies the RAS before the mixed liquor (ML) flows into the aerobic zone. The AS system is configured for nitrification and denitrification. The aerobic system is sized to target a dissolved oxygen level of 2.0 mg/L. [PCO 067] Solids are held in the aeration basins for a period of time that allows carbonaceous BOD removal as well as conversion of ammonia to nitrate. A ML probe is located at the end of the aeration basin to monitor suspended solids concentration. The filtered wastewater, called permeate, is transferred to the RO Feed Tank.

Aeration Blower

The blowers will be used to compress air for injection into the aeration basins to maintain aerobic biological activity. Each blower will be equipped to optimize efficiency. Temperature detection will be provided for each blower. Pressure will be monitored on both the suction and blower discharge lines with pressure switches. A discharge isolation valve will be provided for each blower. Aeration air pressure is measured at the blower aeration air manifold and is used in blower control. Meters are provided on each aeration basin dropleg to the fine bubble diffusers. Dissolved oxygen (DO) are located in the aerobic zone. The DO probes are also used as a control element blower operation to maintain a DO setpoint. [PCO 023]

Scum/Foam Control

Floating solids are periodically removed from the aeration basin surface using the scum collection boxes and valves located at the end of the basin. The material will be transferred to the WAS Wetwell. This prevents foam from accumulating in the system.

WAS

The Scum/WAS Wetwell receives scum from the aeration basins and a portion of RAS that is diverted to the WAS to control sludge retention time (SRT). One rotary lobe pump transfers WAS sludge to the sludge holding tanks. Another rotary lobe pump transfers Scum to the sludge holding tanks. WAS pump flowrate is adjusted as needed to maintain the require SRT. Scum pump flow rate is operated based on level in the Scum/WAS Wetwell. Pressure gauges are located on the discharge of each pump. The pumps discharge to a common manifold that is metered.

MBR

Mixed liquor effluent flows from the AS plant to the ML Collection Channel which is equipped with a MBR Feed Pump to transfer biomass into the MBR. The biomass flows into the MBR where the membranes are located. The membranes filter the inorganics and organics larger than the membrane pore size and provide a degree of pathogen removal. The membranes are used to provide a portion of the disinfection and aid in removing some organics that contribute to disinfection byproducts.

Scour Air Blower

Each MBR cassette receives a continuous air flow to maintain an aerobic environment. Air is supplied by membrane scour blowers. Ambient air is compressed through the blowers and then discharged through piping to each MBR cassette. MBR level is continuously monitored, displayed locally and transmitted to SCADA. Discrete level sensors are used to generate alarms for high-high and low-low levels. Operating outside of these levels could adversely impact MBR operation.

Solids that slough off the membranes are drawn from the aeration basins. A portion of the solids are removed from the system through the WAS pumps and transferred to the solids area for storage and subsequent dewatering. Most of the MBR solids are returned to the AS system via the DeOx Tank. The tank is mixed gently without the addition of any food. The purpose of the tank is to remove free oxygen from the biomass. The deoxygenated biomass is discharged into the AN basin influent where it is blended with screened and degritted wastewater.

Membrane Cleaning Options

Biological fouling occurs when aerobic and anaerobic bacteria, fungus, and algae colonize on the membrane surface and begin growing. Precipitative fouling is the scale formation when compounds in the wastewater are concentrated beyond their solubility. Precipitative fouling usually does not occur in the membranes unless the wastewater has a high pH combined with hard water. Adsorptive fouling occurs when oil, polymers, surfactant, and hydrocarbons adhere to the membrane surface and clog the membrane pores. Cake formation (sludging) occurs when the membranes accumulate solids between the membrane fibers that do not allow wastewater to reach the membrane surfaces. Cleaning options are described below

Membrane Backwash System

The filtrate pump that runs in reverse supplies water forced through the lumen (inside) of the membrane fiber to the outside surface. [clarification] The water flushes any material (foulant) that has accumulated on the membrane surface, and flushes it into the membrane basin. A backpulse pressure of 10 psi and a flow rate one and a half times the production flow are applied to the membranes every 15 minutes for 15 seconds (these times are Operator adjustable). The backpulse water remains in the basin and is filtered as ML.

Clean in Place (CIP)

Two types of CIP cleans are used on the membranes to deep clean the membranes when the TMP increases to 12 psi or the membrane recovery is lower than a predetermined value.

Maintenance CIP Clean

The maintenance clean uses a low dosage (100 mg/L, which dilutes to 10 mg/L in the basin) of sodium hypochlorite, and the chemical is backpulsed through the membranes (inside to outside) into the basin. The membrane basin remains full during the maintenance clean. The membrane control system then cycles to a relaxation mode to soak the membranes for 1 to 5 minutes (Operator preset time). The membranes then

cycle into the production mode, and the basin content is filtered as normal. The maintenance clean is performed every 24 hours, and is completed with the membrane basin full of water

Recovery CIP Clean

The recovery clean is run every 3 weeks or at determined intervals based on operational experience. The recovery clean can use either sodium hypochlorite or citric acid. The sodium hypochlorite dissolves and removes organic materials and citric acid dissolves and removes inorganics that have fouled or blocked the membranes. Sodium hypochlorite is fed at 10,000 mg/L or 1 percent solution concentration; citric acid is fed at 1,000 mg/L. Softened water is used and the water is heated prior to the CIP clean to increase the efficiency of the chemical if needed in the cleaning process.

The recovery clean is performed with the membrane basin empty. The CIP pump draws water from the softened water storage tank. As the water is drawn from the softened water tank, sodium hypochlorite or citric acid is fed into the CIP pump discharge and backpulsed into the membranes. The backpulse carries the specified chemical from the inside of the membrane fiber to the outside at the full concentration. The backwash pumps then fill the membrane train/basin with potable water from the finished water reservoir; the water is then transferred through the membrane fill line to the specified train. The water in the basin dilutes the chemical concentration; the membranes soak in the chemical water in the basin for 4 hours before the water goes to the next train or ends the clean. The membrane train/basin water is drained and sent to the CIP disposal basin or transferred to the next membrane train that undergoes the following cycled recovery clean. The membrane train/basin water may be transferred and used in four recovery cleans before being diverted to the CIP disposal basin. Operational experience determines the recovery clean basin water recycle.

Normal Operation

The MBR equipment is normally operated in Remote Auto. The ML will be less than 8,000 mg/l in BNR basins and less than 10,000 mg/l in MBR tanks.

2.7 Sludge Holding Tanks

The Sludge Holding Tanks will receive, store, and aerate activated sludge wasted from the MBR process. The process is not designed to digest the sludge. A two-cell WAS sludge holding tank shall be provided to store and aerate WAS sludge. Each zone shall be designed to operate independently, and it is expected that normally only one zone will be in use to minimize sludge age for optimization of dewatering system performance. Each zone shall include a mixer to mix the WAS sludge and coarse bubble diffusers to aerate it.

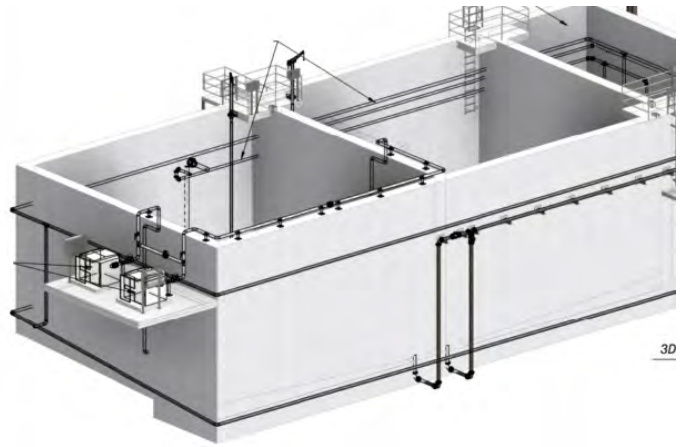

Key Overall Facility Features

- Two cell concrete tank with ability to store approximately 14 days of sludge at AAF conditions [PCO 067]
- Tank shall be divided into two cells to allow operators to use half the volume for normal operations. In general, it is recommended to minimize sludge storage time.
- Access platform at the top of the tank for mixer maintenance.
- One staircase to the top of the Sludge Holding Tank platform in lieu of a ladder. [PCO 044.1]
- Influent and effluent isolation to tank.
- Isolation valves above ground to bypass tank and send straight to dewatering system.
- Two aeration blowers are included directly adjacent to tank to improve blower efficiency.

Equipment – Blowers

- 2 @ 320 scfm each. 1 per storage cell. Only one storage cell needed for operation. [design development]
- Blowers shall have VFDs
- Target blower efficiency 75% or greater.
- Supplies air to coarse bubble diffuser grids
- Blowers to be Positive Displacement type.
- Blower manufacturer shall utilize OEM packaged equipment as detailed on the P&IDs.
- Manufacturer: Aerzen [PCO 30]

Equipment – Coarse Bubble Diffusers

- 2 grids, one per cell of sludge holding tank
- 304L stainless steel
- Manufacturer: EDI, Sanitaire, or equal if approved.

Equipment – Mixers

- 2 provided, one in each cell, to alternate with aeration in order to keep solids mixed.
- 10 hp each
- Manufacturer: Sulzer, Flow Systems, Flygt, or equal if approved.

Control Features

- Local control panel by blower manufacturer with PLC start/stop and monitoring.
- Plant PLC turns blowers on/off are based off time and level to promote denitrification and alkalinity management.
- Plant PLC turns mixers on/off to provide sludge mixing when blowers are off or continuously if operators select.
- Operators manually select which unit(s) and tank(s) operate and leave them running continuously.

Operations Purpose

The sludge holding tanks are aerated tanks holding sludge wasted from the MBR. The tanks act as a reservoir for feed sludge to the belt press and provide some stabilization of biomass.

Operations Description

The facility is designed to operate the belt press two days a week. The sludge holding tanks act as a reservoir for sludge that feeds the belt press. The tank is aerated using diffusers to keep the environment oxic for aerobic and facultative bacteria. The microorganisms use the oxygen and obtain energy from incoming organic matter in the WAS. When the food supply is limited the microorganisms consume their own protoplasm to satisfy their energy requirements. Eventually the cells undergo lysis and release degradable organic matter which is then available for other microorganisms and biologically destroys volatile solids. The digester freeboard/head space will be minimized to reduce potential for odor accumulation. A mixer is located in the tanks and can be used to lift solids from the bottom of the tank.

Normal Operation

MBR waste activated sludge is continuously sent to the sludge holding tanks. The blower runs as required to maintain an aerobic environment in the tanks. The mixer can be operated only when the aeration is off, or continuously as required to keep WAS sludge mixed.

2.8 Sludge Dewatering

The Sludge Dewatering System will pump waste sludge from the Sludge Holding Tanks, or directly from the MBR system, and perform dewatering to remove water and increase total solids concentration. Design the pumping, conveyance, and dewatering system to convey solids from dewatering equipment to rolloff container with minimal exposure for odor release. The distance and lift between the Sludge Holding Tanks, dewatering equipment, and rolloff container shall be minimized. Design shall achieve distribution of dewatered sludge from conveyor into dumpster. The canopy shall be sized to accommodate working space around the equipment for future wind barriers to be added between columns. [PCO 028] A polymer storage and feed system shall be furnished to achieve required solids concentration (described in Section 2.11).

A belt filter press sludge dewatering system shall be furnished to dewater aerated WAS sludge down to a water content suitable for hauling and disposal. Belt filter press supplier shall utilize OEM packaged equipment as detailed in the table below and on the P&IDs.

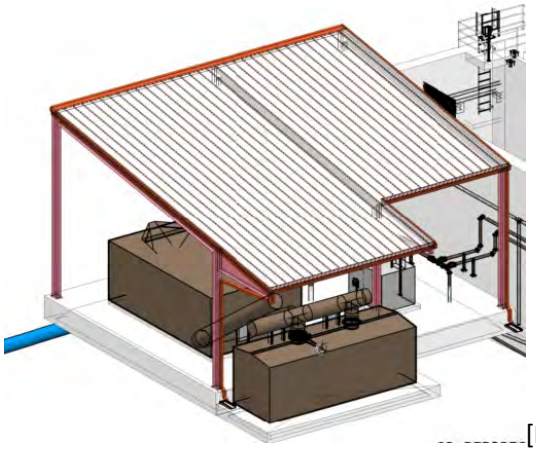

[PCO 015]

Key Overall Facility Features

- 1 Belt Filter Press to be operated 2 days per week, 8 hours per day.
- 1 Conveyance System to convey dewatered solids to a 40 yard roll-off container (container provided by hauling company).
- Curbed washdown around the polymer injection location at the belt filter press [PCO 046]
- 1 dual-port dumpster conveyor system to selectively distribute dewatered solids in the dumpster. [PCO 015]
- Dumpster is uncovered but under a canopy. [PCO 015]
- 2 rotary lobe pumps to feed the belt filter press either from the sludge holding tank or directly from the WAS pipe.
- Polymer storage and feed equipment provided directly adjacent to belt filter press.

Equipment – Belt Filter Press

- 1 unit
- Minimum guaranteed dry solids concentration: 17%
- Minimum capture efficiency 95%
- Solids flow: 1,313 lbs/hour.
- Liquid flow: 305 gal/min.
- Polymer system provided in Chemical Storage and Feed Form.
- Manufacturer: Komline-Sanderson, BDP, Charter Machine Company, Ashbrook, or equal if approved.

Equipment – Rotary Lobe Feed Pumps

- 2 (1 duty, 1 standby).
- Capacity: 305 gal/min ea.
- Ability to operate in local manual mode and drain the SAFE Settle Tank [PCO 068]
- Manufacturer: Borger, Netzsch, or equal if approved.

Equipment - Conveyor

- 1 angled conveyor to lift solids from belt filter press up to dumpster distribution conveyor.
- 1 horizontal conveyor with 2 electric knife gate valves above dumpster to distribute dewatered solids evenly.
- Manufacturer: JDV, Custom Conveyor Corporation, or equal if approved.

Control Features

- Local control panel by dewatering equipment manufacturer with Plant PLC start/stop and monitoring.
- Dewatering equipment local control panel will communicate for coordinated operation with polymer feed system and sludge feed pumps.
- Knife gate valve on dumpster conveyor are motorized with operators manually selecting which to open in order to distribute dewatered solids.

Operations Purpose

The dewatering system dewaters sludge to reduce the moisture content so that it can be handled as a dry cake instead of a liquid. Cake is dropped onto a conveyor which transports the cake to a dumpster for temporary storage. Water removed from the sludge is called filtrate and drains to the sewer. The dewatered sludge product weighs less which reduces transport and ultimate disposal costs to reuse sites.

Operations Description

Belt Press Feed Pumps

Two dewatering sludge pumps each equipped with variable frequency drive (VFD) drives transfer stabilized sludge from the sludge holding tanks to the belt press. Pressure is displayed locally on the pump suction and discharge. In the event of low suction pressure or high discharge pressure the dewater pump shuts down. Prior to pump start up the seal water low pressure switch must not be energized. The pumps discharge to common discharge line where the flowrate is measured, displayed locally and transmitted to the PLC. Polymer is added to the sludge feed as a coagulant to enhance coagulation. Dosage is based on the sludge feed rate and is set through SCADA.

Once pumps and VFDs are energized the pumps are controlled using the local control panel (LCP). With the control selector switch in the Hand position the pumps run continuously with the speed set manually at the VFD. In the Off position the pumps do not run. In the Remote position power is transferred to the PLC and the SCADA interface used to set controls. In Remote Auto the BFP LCP controls pump operation.

Polymer Feed System

Refer to Section 2.11-Chemical Storage and Feed for details on the Polymer Feed System.

Belt Filter Press

Sludge is transferred from the sludge holding tanks to the belt press using rotary lobe pumps. The belt press consists of a drive, gear reducer, a set of two continuously moving permeable belts, hydraulic system, belt wash system, and associated controls. Polymer is used as a coagulating agent to help release water from the sludge. Polymer is added to the feed pump discharge line prior to discharge onto the press.

The dewatering LCP controls dewatering operating using a control selector switch. In the On position the dewatering system starts by starting the cake conveyors and opening the dumpster gates. The plant service water solenoid valve opens to supply the two belt press washwater boxes. The drive motors start which moves the belts through the wash boxes to wet the belt. The plant service water line has a low pressure switch that shuts down the belt press in the event there is insufficient water pressure to clean the belts. The polymer feed system is then called to operate (the polymer metering pump must be in Auto control). The conditioned sludge is discharged onto the upper belt in the gravity drainage section. The sludge is evenly distributed onto the belt through an inlet distribution assembly. The sludge is retained in this section by rubber-edged guide plates. A series of plows promotes sludge dewatering by constantly turning over the sludge to expedite water drainage and ensure even distribution across the entire width of the belt filter. The belt over this section is supported on a fixed plastic grid. Initial dewatering takes place by the water draining through the sludge mass and belt. The drainage is collected in a separate trough, located under the belt. The dewatering system does not run if the control selector switch is in the Off position. An Estop is also located on the Dewatering LCP and will stop the dewatering option if the button is pushed.

The partially-dewatered sludge is transported to the vertical dewatering zone. The tapered V-shaped vertical chamber, which has a variable opening, is formed by the two downward-moving belts. The end walls are formed by two flexible seals, covered by a low friction plastic strip and fixed to the frame of the press. In this vertical zone, each band is supported by rigid perforated plastic grids over which the belts slide. The two belts move from the vertical zone and pass around a large perforated drum fitted with internal scoops which carry the filtrate outwardly. The filtrate passes from the inner surface of the belt/sludge sandwich to discharge ports on one end of the drum.

The sludge is contained between the two belts and travels between a series of shear-producing rollers where additional water is released due to increasing pressures. The water is drained into a collection trough. All of the rollers are of the freely rotating type, except the last one which is the drive roller. After passing over this roller, the belts separate. Spring-loaded scraper blades are provided to separate the cake from the belt at the point of cake discharge. The cake drops onto the inclines conveyor

Cake Conveyance

An inclined screw conveyor transports cake to the dual-port dumpster distribution screw conveyor. Motorized gates are located on the bottom of the shaftless conveyor that permits the cake to fall into the dumpster. Each conveyor is controlled from a LCP using a control selector switch. In the Local position the conveyors are controlled using Start and Stop switches; in Off the conveyors do not run; in Remote position control is passed to the PLC and operation set through the SCADA interface. In Remote Auto the conveyors are controlled as part of the dewatering start and stop sequence.

Normal Operation

The belt press runs continuously for the duration of the sludge processing event. The belt press, sludge feed and polymer feed system operate in Remote Auto through the Master Control Panel. The automated startup and shutdown sequences for the components are managed by the MCP. The polymer dosage and belt speed are adjusted by the Plant Operator.

2.9 Reverse Osmosis

The Reverse Osmosis (RO) System will receive filtrate from the MBR System and produce treated water as part of the IPR system. RO concentrate shall be routed directly to the ocean outfall using residual pressure without additional pumping. The RO System shall be housed within a building, together with its CIP and flushing systems and the UVAOP System.

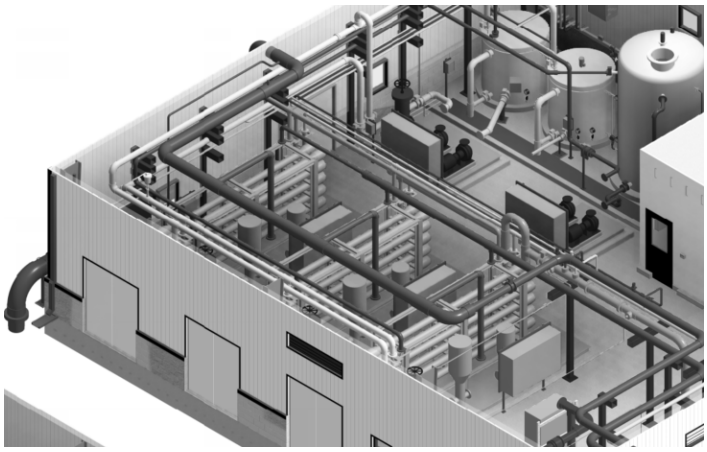

Key Overall Facility Features

- RO Feed Tanks 30,000 gallons
- Three duty, 2 stage RO units sized with a permeate capacity of 215 gpm per unit to produce a total RO permeate volume of 825 AFY.
- Average element flux < 12 gfd; single element flux < 16 gfd
- Recovery: Design = 80%, Minimum 75%, Maximum 85%
  RO System including:
  - RO high pressure feed pumps, motors, and AFD's dedicated to each unit
  - RO units
  - RO sampling lines and sample collection points
  - Clean in place (CIP) system and flushing system including tanks, pumps, motors,
  - Neutralization system.
  - RO Inter-stage booster pumps, motors and AFDs.
  - Instrumentation and control system
  - Cartridge filters and cartridge filter elements.
- Calcite remineralization is covered in the RO Product Water Tank Section 2.15.
- Manufacturer / System Supplier: H20 Innovation USA, Inc.

Equipment – RO Units

- 3 duty @ 215 gpm design permeate flow rate per unit.
- Number of Stages per Unit = 2
- Number of RO elements per pressure vessel = 7.
- Number of Stage 1 pressure vessels = 7
- Number of Stage 2 pressure vessels = 3
- Manufacturer: Selected by System Supplier.

Equipment – RO High Pressure Pumps

- 1 duty dedicated per RO unit.

- Vertical multistage.
- VFD drive.
- Operating capacity 202 gpm to 287 gpm
- NPSHa = 30 ft
- Motor Power (to be provided by ROSS)
- Manufacturer: Selected by System Supplier.

Equipment – RO Inter-Stage Booster Pump

- 1 duty dedicated per RO unit.
- Minimum rated head = 50 psi.
- Vertical multistage.
- AFD drive.
- Manufacturer: Selected by System Supplier.

Equipment – RO CIP Tank

- 1 tank, vertical cylindrical, dome top, flat bottom, FRP or PE, minimum usable storage volume 900 gallons
- 1 immersion type heater, sized to heat the temperature of the CIP solution 10 °C in 3 hours.
- Manufacturer: Selected by System Supplier.

Equipment – RO Neutralization Tank

- 1 tank, vertical cylindrical, dome top, flat bottom, FRP or PE, minimum usable storage volume 1,800 gallons.
- Manufacturer: Selected by System Supplier.

Equipment – CIP Recirculation Pumps

- 2 @ 350 gpm, 140 ft TDH (final sizing by System Supplier). 1 duty / 1 standby.
- Horizontal end suction centrifugal pump or vertical multistage.
- Manufacturer: Selected by System Supplier.

Equipment – RO Flush Tank

- 1 tank, vertical cylindrical, dome top, flat bottom, FRP or PE, minimum usable storage volume 2,300 gallons sufficient for sequential flushing of all three trains
- Manufacturer: Selected by System Supplier.

Equipment – RO Flush Pumps

- 2 @ 210 gpm each, 140 ft TDH (final sizing by System Supplier). 1 duty / 1 standby.
- Horizontal end suction centrifugal pump or vertical multistage.
- Manufacturer: Selected by System Supplier.

Equipment – RO Feed Cartridge Filter Vessels

- 3 cartridge filter vessels, 300 gpm design capacity, 316 SS (1 per RO unit).
- Horizontal or vertical vessel orientation per ASME Code with stamp
- Maximum loading rate @ design flow rate = 3.5 gpm per 10 inch equivalent length
- Maximum clean element head loss @ design flow rate < 3 psi
- Maximum dirty element head loss @ design flow rate = 15 psi

- Maximum 10 micron polypropylene
- Manufacturer: Selected by System Supplier.

Equipment – RO CIP Cartridge Filters

- 3 cartridge filter vessels, 300 gpm design capacity, 316 SS (1 per RO unit).
- Horizontal or vertical vessel orientation per ASME Code with stamp
- Maximum loading rate @ design flow rate = 3.5 gpm per 10 inch equivalent length
- Maximum clean element head loss @ design flow rate < 3 psi
- Maximum dirty element head loss @ design flow rate = 15 psi
- Maximum 10 micron polypropylene
- Manufacturer Parker Hannifin Corp., 3M, Pall or equal.
- Manufacturer: Selected by System Supplier.

Equipment – RO elements

- 8 inch by 40", thin film composite, spiral wound
- Manufacturer: Selected by System Supplier. Anticipated to be Toray.

Equipment – RO pressure vessels

- Fiber glass reinforced plastic
- ASME stamped
- Minimum pressure ranting = 300 psi for operating temperatures (4.4 to 88 °C)
- Manufacturer: Selected by System Supplier.

Control Features

- The RO system shall be controlled by a PLC that is integrated into a Plant Control System.
- RO High Pressure Feed Pumps
  - Each high pressure pump (with VFD) shall be controlled to achieve a permeate flow set point of that RO unit (sum of the permeate flow from each stage of the RO unit).
- RO Units
  - RO units shall automatically be brought into and out of service to maintain a minimum level set point in the RO feed tank.
- Concentrate Control Valves
  - Each concentrate control valve shall be controlled to achieve a set recovery of that unit.
- Booster Pumps
  - Each booster pump shall be boost the pressure of the second stage feed to balance the flux between first stage and second stage by controlling the permeate flow of the first stage.
- Pre-Operative Feed Water RO Unit Bypass
  - Controls shall include a pre-operative bypass executed when the first unit is brought into service with all other units remaining offline. During this procedure cartridge filter effluent shall bypass all the RO units, allowing feed water parameters to stabilize at a set point and chemical flows to stabilize before feed water is admitted to the membranes.
- Off spec water handling as shown on P&IDs. In off spec event, flow shall be stopped and automatically diverted to ocean outfall via overflow at RO feed tanks. Manual diversion of RO permeate shall also be furnished.
- Post-Operative Feed Water RO Unit Flush
  - Controls shall include an automatic post-operative feed water flush cycle which shall be initiated automatically upon shutdown of the plant, unless the operator selected no feed flush option.

The purpose of the post-operative feed water flush cycle is to ensure that concentrate is flushed from the membranes to prevent fouling of the membranes, corrosion and scale accumulation.

- Post-Operative Permeate RO Unit Flush
  - Controls shall include an automatic post-operative permeate flush cycle which shall be initiated automatically upon shutdown of the unit following a post-operative feed water flush cycle as selected by the operator. no feed flush option. The purpose of the post-operative permeate flush is to ensure that concentrate is flushed from the membranes to prevent fouling of the membranes during shutdown for extended periods of time.

Operations Purpose

The RO system is fed from the MBRs. Flow is received at the RO Feed Tank which stores MBR permeate.

RO removes dissolved constituents from the influent water, which achieves permeate salinity control and additional pathogen log removal credits. The RO feed water is pretreated with cartridge filters to protect the RO membranes against damage from large particles. Finally, the water is pressurized and passed through the RO membrane elements before permeate (ROP) is discharged to the UVAOP for disinfection.

Operations Description

The RO system shall be controlled by a PLC that is integrated into a plant control system that operates the RO high pressure feed pumps, concentrate control valves, booster pumps, cartridge filters, Flush system, CIP makeup and neutralization systems.

RO Feed System

The MBR permeate pumps discharge to the two RO feed tanks. The tank level is measured, displayed locally and transmitted to PLC. The tank has switches that are used to activate the High-High and Low-Low Levels.

Pump controls are set locally. With the control selector switch in the Local position the pump are operated using Start and Stop pushbuttons and the speed adjusted using a potentiometer; in the Off position the pumps to not run; in the Remote position control is passed to PLC. Pump pressure is displayed locally. Pump duty selection (lead, lag or set a put to be out of service) is set from the configuration screen. In the event the lead pump fails the lag pump is promoted to the lead pump role; the third pump is used as a standby pump. When a pump is selected as out of service the pump is taken out of the control loop. In Remote Auto the pump(s) start or stop and adjusts speed uniformly to maintain set distribution pressure. If distribution pressure continues to rise with one pump in operation at minimum speed, that pump will cycle off and allow the air-bladder tank to supply those low demands. The pump will automatically restart when distribution pressure dips indicating the air-bladder tank is not keeping up with demands. The pumps discharge to a common manifold where flow, discharge pressure and pH are measured, displayed locally and transmitted to PLC.

Liquid ammonia sulfate [PCO 67], sodium hypochlorite, sulfuric acid and antiscalent are added to the RO feed supply line. [PCO 67] [PCO 032.1] A locally mounted flow meter measures, displays and transmits to PLC. After chemical has been added a sample pump pulls a portion of the flow from the feed line and discharges it to the RO Feed Analytical Panel where conductivity, turbidity, ORP, chlorine, pH and sodium hypochlorite concentrations are measured, displayed and transmitted to the PLC.

RO Membranes

The RO high pressure feed pumps (with AFD) shall be controlled to achieve a permeate flow set point of that RO unit (sum of the permeate flow from each stage of the RO unit). One feed pump is dedicated to Stage 1 of

each RO unit. The RO units shall automatically be brought into and out of service to maintain a minimum level set point in the RO feed tank. Concentrate control valves shall be controlled to achieve a set recovery of that unit. A booster pump is used to increase second stage feed flow to balance the flux between first stage and second stage by controlling the permeate flow of the first stage. Pressure is measured on the RO permeate (ROP) and RO concentrate (ROC). Conductivity is measured on the ROP of each stage, displayed locally and transmitted to PLC. The ROP flow rate is measured locally displayed and transmitted to PLC. Pressure is monitored locally, displayed and transmitted to PLC.

ROP pressure is monitored, displayed locally and transmitted to the PLC. In the event of high pressure, a pressure switch generates an alarm at the PLC and an air vent release valve opens. A flow meter measures, displays and transmits the RO Unit ROP to PLC. ROP outlet piping three locations. During a normal operation ROP is directed to the UV system for disinfection through a flow control valve. Valve controls are set locally. In Local valve position is set using the Open and Close selector switch; in Remote control is passed to the PLC that controls the RO System. Flow not directed to the UV system is a split between the OPS and the RO CIP System. Note that RO train ROP to the outfall is combined in a single line to the OPS.

ROC pressure is monitored, displayed locally and transmitted to the PLC. In the event of high pressure an air vent release valve opens. A flow meter measures, displays and transmits the RO Unit flow to the PLC. During a normal operation ROC flows through the line at a preset flow rate that is set through a flow control valve. Valve controls are set locally. In Local valve position is set using the Open and Close selector switch; in Remote control is passed to the PLC that controls the RO System. Flow not directed to the UV system is split between the OPS and the RO CIP System. Conductivity and pressure are locally measured, displayed and transmitted to the PLC.

RO Sequencing

Pre-Operative Feed Water RO Unit Bypass

A pre-operative bypass shall be executed when the first unit is brought into service with all other units remaining offline. During this procedure, flow shall bypass all the RO units, allowing feed water parameters to stabilize at a set point and chemical flows to stabilize before feed water is admitted to the membranes.

Post-Operative Feed Water RO Unit Flush

An automatic post-operative feed water flush cycle which shall be initiated automatically upon shutdown of the plant, unless the Operator selected no feed flush option. The purpose of the post-operative feed water flush cycle is to ensure that concentrate is flushed from the membranes to prevent fouling of the membranes, corrosion and scale accumulation.

Post-Operative Permeate Water RO Unit Flush

The membrane flush system is used to remove salt and scale buildup at the RO membrane surface that normally occurs during the membrane permeation process upon normal shutdown of the RO train. By flushing the membranes with RO permeate, any concentrated salts are washed from the membranes, minimizing possible scaling during system shutdown time periods. The flushing system is automatically energized during the normal RO system shutdown cycle or can be manually started by the facility operator.

RO Flushing System

A portion of the ROP is directed to the RO Flush Tank for use in flushing the membranes. A valve is located on the flushing feed to admit solution during the flushing cycle.

The tank level is measured, displayed locally and transmitted to PLC. The tank has switches that are used to activate the High-High and Low-Low Levels.

The tanks supply the RO flush pumps which discharge the ROP through the cartridge filer. The filtered ROP is divided between the CIP Makeup Tank and each RO feed line. Pump controls are set locally. In the On position the pump runs continuously; in the Off position the pumps does not run. Pump duty selection (duty, standby, or out of service) and pump start and stop levels are set from the configuration screen. In the event the Duty pump fails the Standby pump runs. When a pump is selected as out of service the pump is taken out of the control loop. The Duty pump starts at a preset low tank level and stops when the high level setpoint is reached. Discharge pressure is shown locally on the pump discharge. Pressure is monitored on the cartridge filter supply and is displayed locally and transmitted to PLC.

RO CIP Makeup Tank

RO CIP solution is formulated in the RO CIP Makeup Tank. Citric acid, ROP and sodium hydroxide are combined. The tank includes a site gauge to determine CIP level, a low level switch and a high level switch. On low level an alarm is generated to notify the Operator. The high level switch signals that an overflow event is imminent. Increase flows to the tank overflows to the RO CIP Containment Area.

The CIP Pumps draw from the CIP Makeup Tank discharge flow through the membrane and return the flow to the CIP Makeup Tank.

RO Neutralization Tank

The Neutralization Tank contains a solution of citric acid and sodium hydroxide that is blended together using a mixer. Mixer controls are located at the MCC and include a control selectors switch (Local-Off-Remote [LOR]), and reset pushbutton. In the Local position the pump runs continuously when the local control switch is in Start and stops when the switch is in Stop. Placing the local control switch in LO locks out the mixer. The neutralization solution returns to the Neutralization Tank through the RO Cleaning line. The tank includes a site gauge to determine, a low level switch and a high level switch. On low level an alarm is generated to notify the Operator. The high level switch signals that an overflow event is imminent. Increase flows to the tank overflows to the RO CIP Containment Area. A pH analyzer and level sensor are located on the overflow line. Both are displayed locally and transmitted to PLC.

Chemical Feed Systems

Refer to Section 2.11-Chemical Storage and Feed for details.

Normal Operation

Normally the system operates in Remote Auto.

2.10 Ultraviolet Advanced Oxidation Process (UVAOP)

The Ultraviolet Advanced Oxidation Process (UVAOP) System shall receive water from the Reverse Osmosis (RO) system and treat it to create IPR water. 4 month modeled and 2 month actual wellfield travel time shall be assumed for system sizing. The UVAOP system shall be provided by a single system supplier and shall be installed in the same building as the RO System.

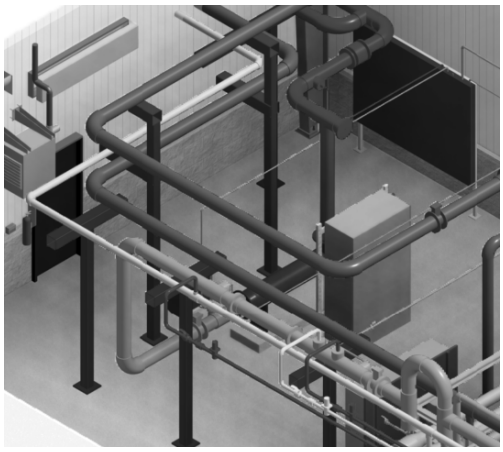

Key Overall Facility Features

- Located indoors in the RO building
- Power & Control Panel included with equipment
- UV lamps: Low-pressure high output (LPHO)
- Shall be designed based on 96% UVT.
- Oxidant: Chlorine (delivered as 12.5% sodium hypochlorite solution)
- UV AOP System including:
  - UV Reactors / lamps
  - Cleaning system (portable cart or automatic mechanical/chemical wiping system)
  - Power / Control Panels
  - Master Control Panel
  - Meters and Instrumentation
  - Safety Equipment
  - Special tools /spare parts
  - UV sampling lines and sample collection points
  - Oxidant storage and injection system.
- Treatment Requirements:
  - 1,4 Dioxane target log reduction 0.5 (DDW requirements for IPR)
- UV System Manufacturer/Supplier: Xylem (Wedeco), Trojan, Calgon Carbon, or equal if approved

Equipment – UV Reactors

- Required UV Dose (TBD by UV system suppliers)
- 1 @ 0.31 – 0.93 MGD each, 1 duty. [PCO 042]
- 316L stainless steel

Equipment – Power & Control Panel

- Located adjacent to UV reactor in the UV reactor room [PCO 042]
- NEMA Rating 4

- Power Supply 480 V, 60 hz, 3-phase.

Equipment – Cleaning Equipment

- Due to the low pH and mineral content of the RO permeate cleaning of UV lamp sleeves is not required for AWT applications such as Morro Bay WRF. Provisions will be included to allow the UV lamps to be cleaned manually as needed for proper operation.

Equipment – Oxidant and Storage Injection

- Required chlorine dose (2-4 mg/L)
- See Section 2-11 – Chemical Storage and Feed Facilities – Sodium Hypochlorite. [clarification]

Control Features

- The UV AOP system will be controlled by a vendor furnished Master Control Panel that is integrated into a Plant Control System.
- UV power
  - The UV power will be adjusted automatically via the reactor control panel based on changes in influent flow, temperature, pH, UVT, oxidant residual, and lamp age to achieve the desired target treatment requirements.
- Offspec water shall be handled by stopping process flow and/or diverting flow to the Outfall Balancing Tank. MBR Filtrate will accumulate in the Feed Tanks and overflow by design to the outfall. Manual diversion on the permeate side of each RO train shall be furnished.

Operations Purpose

The UVAOP receives permeate water from the RO system. The UVAOP provides two mechanisms for treating organic contaminants – direct photolysis and oxidation with sodium hypochlorite. Hypochlorite is fed ahead of the UV units. Using the combined technology RO permeate is disinfected prior to indirect potable reuse.

Operations Description

The UV system receives permeate from the RO units and discharges disinfected water to the Product Water Storage Tank. The UV system is an enclosed system that functions to provide specific wavelengths of electromagnetic radiation to inactivate microorganisms by damaging their DNA and rendering them unable to replicate.

The single UV unit has a reactor vessel that contains its own individual enclosure to control the vessel which is connected to the Master Control Panel. [PCO 042] The control panel sends and receives signals to and from the Plant Control System for remotely monitoring and operating the system. The system will be operated in operated in a Local Manual/Auto mode through the UV Control Panel or, in a Remote Manual/Auto mode through SCADA. The UV power will be adjusted automatically based on changes in influent flow, temperature, pH, UVT, oxidant dose, and lamp age to achieve the desired target treatment requirements.

Sodium hypochlorite operation is described in Section 2.11-Chemical Storage and Feed.

Normal Operation

The UVAOP system operates in Remote Auto. The UV power will be adjusted automatically via the PLC based on changes in influent flow, temperature, pH, UVT, oxidant dose, and lamp age to achieve the desired target treatment requirements.

2.11 Chemical Storage and Feed Facilities

The following section includes the performance criteria associated with chemical storage and feed facilities of the WRF. Chemicals shall be stored on site and dosed into the main process flows at the desired points. The facilities shall be designed with safety in mind to avoid potential harm or spill to the environment.

[PCO 009]

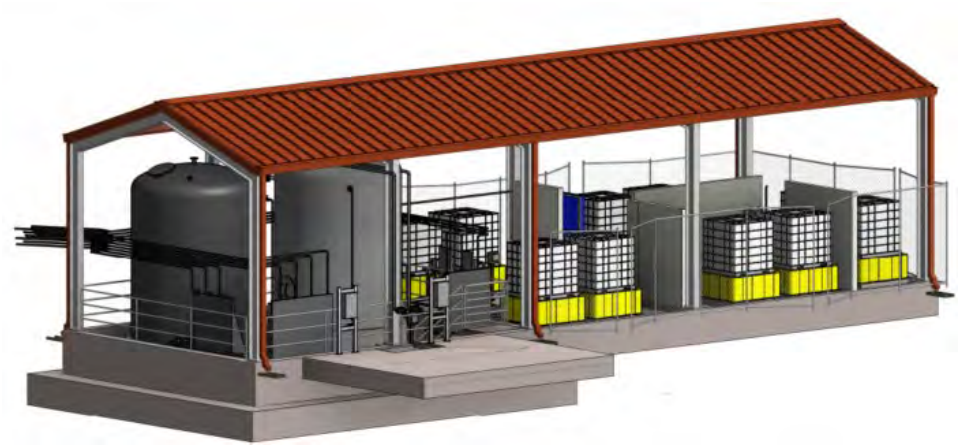

Key Overall Facility Features

- Central Chemical Storage and Feed Facility shall house sodium hypochlorite, sodium hydroxide, citric acid, antiscalant, liquid ammonium sulfate, sulfuric acid and sodium bisulfite either in tanks or totes. [PCO 009] [PCO 032.1] [PCO 067]
- The solids dewatering facility shall contain a polymer feeder / blender skid for dosing upstream of the sludge press equipment.
- Dosing pump skids shall feature peristaltic pumps for metering and transferring chemicals.
- All facilities shall have secondary containment of bulk stored chemicals or secondary tubs for tote stored chemicals to ensure any chemical spills are kept from the environment. Pumps shall be provided to discharge tested/neutralized fluid to plant drain system.
- At least one pump shall be furnished for each injection point.
- Two pumps shall be provided for the sodium bisulfite feed. [PCO-76]
- A shelf-spare of each pump type shall be furnished.
- Chemical piping between locations shall be buried using materials compatible with the specific chemical system. Double contained pipe shall primarily utilize a CPVC containment pipe with flexible polyethylene or Teflon tubing, as required for chemical compatibility. [PCO 010]
- Double-contained chemical lines. Leakage detection via liquid sensors at containment sumps with containment piping routed to direct leakage to sumps, or leakage collection point(s) with liquid sensors if required by layout constraints. Liquid sensors shall be connected to the plant control system to generate an alarm.
- Safety shower and eyewash per OSHA requirements.

Equipment – Storage Tanks

- Sodium hypochlorite (12.5%) and sodium hydroxide (25%) shall be stored onsite in FRP storage tanks.
- The tanks shall be approximately 10ft diameter by 10ft usable depth, or sufficient to contain a bulk truck delivery.

- These storage tanks shall be located within a coated concrete secondary containment area to ensure any chemical spills are kept from the environment.

Equipment – Storage IBCs

- All other chemicals shall be stored within 330 gallon Intermediate Bulk Containers, or IBCs.
- This size of tote shall be sufficient for more than 15 days of average plant use.
- The totes shall sit upon secondary containment tubs so that any spills will be contained and protected from the environment.
- Tote heater and electrical outlet receptacle shall be provided at the sodium bisulfite area. [PCO 76]

Equipment – Pumping Skids

- Chemical pumps shall be skidded and prewired, to reduce complicated small bore piping and termination of wiring done in the field.
- Pumps shall be designed to have flow rate safety factor of 1.25 over maximum required feed rate.
- The pumps shall be peristaltic type, check valve free, with compression rollers, retractable tubing, and on board controllers.
- Furnish with discharge pulsation dampeners, flush connections, pressure indicator/switch, and calibration column.
- Furnish with disconnects for piping, electrical and control.
- Provide 2 spare tubes for each continuously operating pump, furnished in durable case.
- Pumping skids shall have integral drip pan.
- Manufacturer: Prominent, Lutz-JESCO, Watson Marlow, Milton Roy, Blue-White, or equal if approved.

Equipment – Polymer Feeder / Blender Skid

- The chemical pump shall be skidded and prewired, to reduce complicated small bore piping and termination of wiring done in the field.
- The blender shall feature a mixing chamber to properly blend the emulsion polymer to aid in dewatering the sludge.
- The pump shall be peristaltic type, with on board controllers.

Truck Unloading Station

- The chemical facility shall be located adjacent to the road to allow chemical delivery trucks access for unloading.
- The location where trucks shall park to offload chemicals shall be depressed such that any large spills shall be contained. The depressed area shall drain into the secondary storage area so that it can be properly neutralized and disposed of without the risk of damage to the environment.

Control Features

- The truck unloading area shall have audible alarms that alert the driver in the event of overfilling.
- Chemical tanks shall be furnished with level transmitters as shown on P&IDs.
- All pumps shall have the ability to be remotely controlled via the plant PLC, or locally for operator testing or manual feeding.

Operations Purpose

The chemical feed systems are operated to treatment chemicals at the required dose to various places in the process. Each chemical injection point has at least one pump dedicated to it for direct control of chemical dosage.

Operations Description

All chemical systems will normally be operated in Remote-Auto. The systems will be designed to operate in dose control. Operators will periodically perform draw-down calibrations to input the correlation between pump speed and volume pumped into the Plant PLC system. For each injection point, operators will set a required chemical dose. The Plant PLC systems will vary the pump speed as required to deliver the required dose. The calibrated chemical metering pump is used to monitor the delivered chemical flow rate.

2.12 Odor Control

Odor control shall be provided for the headworks, fine screens and SAFE Diversion Box. [PCO 004] Odorous air shall be contained and treated onsite.

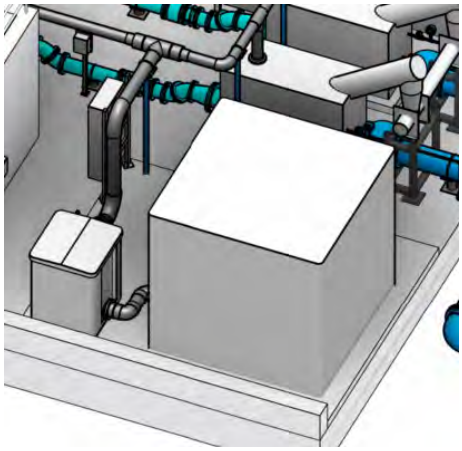

Key Overall Facility Features

- 1 packaged biofilter system with centrifugal fan for headworks odor control (See Proposal Form 1 and 2 for headworks equipment).
- Biofilter system vessel includes humidification chamber (Stage 1) followed by engineered media biofilter for odorant removal (Stage 2)
- Recirculation pump for Stage 1
- Irrigation system to distribute reclaimed water to Stage 2
- Nutrient tank and feed pump
- Standard instrumentation, control panel, and water panel

Equipment – Biofilter System

- 1 FRP tower with corrosion resistant components.
- Media: Stage 1 = Synthetic, structured; Stage 2 = Engineered, inorganic.
- Empty Bed Residence Time: Stage 1 = 2 seconds; Stage 2 = 30 seconds.
- 99% H2S removal efficiency or 0.1 ppm discharge.
- Manufacturer: Integrity Municipal Systems, ECS, BioAir, or equal if approved.

Equipment - Fan

- 1 centrifugal fan with sound attenuating enclosure.
- 830 cfm airflow for headworks odor control. [PCO 004]
- Manufacturer: Furnished by packaged biofilter manufacturer.

Equipment – Nutrient Storage and Feed System

- 1 nutrient tank and feed system.
- Tank material and capacity: linear or cross-linked polyethylene resin, <100 gal. Furnished by biofilter manufacturer.
- Manufacturer: Furnished by packaged biofilter manufacturer.

Control Features

- Local control and water panel by packaged biofilter manufacturer with Plant PLC start/stop and monitoring.
- Operators manually select which unit(s) operate and leave them running continuously.
- Local control panel initiates operation of fan, irrigation system, and nutrient feed system.

Operations Purpose

The Odor Control shall draw foul air from the Headworks and discharged the air to the biological Odor Scrubber.

Operations Description

The odor control system uses microorganisms to metabolize odorous. An odor control fan draws odorous air from the head works through a fan pre-filter to capture particulates and discharges it to the once through scrubber. Treated air vents from the top of the scrubber to atmosphere.

A differential pressure switch monitors the pressure drop across the prefilter. If the pressure drop is excessive the filter should be inspected for water accumulation or a dirty filter. Fan controls are set at the Local Control Station (LCS). Placing the control selector switch in Local pump operation is set using the Start or Stop switch; in Off the fan does not run; in Remote control is passed to the PLC and controlled through the SCADA screen. Fan status and control mode are passed from the LCP to the Odor Control Panel.

The filter media is highly porous with a special coating of nutrients and buffering agents to provide an optimal surface for biofilm growth without media degradation. The hydrogen sulfide reducing bacteria grow due to the nutrients and use the hydrogen sulfide as a food source. As long as nutrients are present, hydrogen sulfide is present in the incoming air flow, and enough water is being recirculated to help with sloughing of the bioslime, hydrogen sulfide reduction takes place. A differential pressure switch monitors the pressure drop across the media. If the pressure drop is excessive the filter should be inspected for excessive bioslime growth.

Normal Operation

The odor control system runs continuously in Remote Auto.

2.13 Outfall Pump Station (Effluent Pump Station)

The Effluent Pump Station shall convey treated flows, treated effluent that exceeds well-field injection capacity, or water that does not meet specification for groundwater injection to the ocean outfall. RO Reject shall also go to the outfall, but residual pressure will used to drive it to the outfall without additional pumping or passing through the Outfall Balancing Tank. [clarification] A disinfection pipeline contactor shall be located downstream of the Outfall Pump Station to disinfect outfall flows with sodium hypochlorite. Sodium bisulfite shall be injected at the end of the contactor on site to reduce chlorine residual to necessary value for ocean discharge.

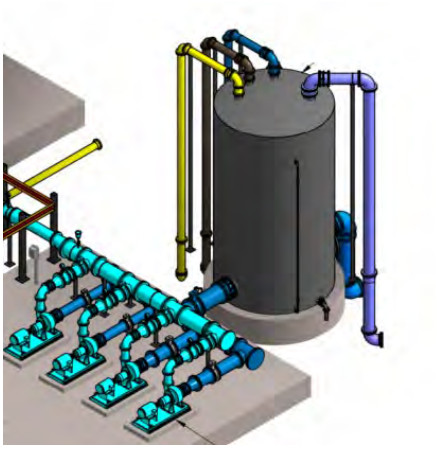

Key Overall Facility Features

- Outfall Balancing Tank to receive flows from MBR system, SAFE System, or RO train effluent bypass. Balancing Tank allows three identical size pumps to be used over a wide flow range.
- Ocean Outfall pumps to deliver water to the Outfall Disinfection Contactor Pipeline and on to the Ocean Outfall.
- Outfall Disinfection Contactor Pipeline located on-site to provide required disinfection volume without requiring a tank to maintain. Dechlorination feed facility and point of compliance are located onsite for ease of operation.
- Pump type and materials selected for good efficiency and operating life.
- Flow meter for delivered flow monitoring.
- Pump station design and pump head are dependent on outfall pipeline size and design by others. It is assumed outfall pipeline design will be such that discharge HGL at the pump station will be 168 feet, or lower, above sea level at 5,006 gpm and 187 feet, or lower, above sea level at 5,652 gpm.
- System shall include vacuum relief valve and VFD slow start to mitigate surge. It shall be assumed pipeline design shall be coordinated and equipped by others such that no additional facilities are needed at this pump station for surge mitigation.

Equipment – Outfall Pumps

- 3 duty / 1 standby rated to deliver peak hour WRF influent flow rate.
    - 2 @ 2.1 mgd @ 61 ft TDH each.
    - 2 @ 4.1 mgd @ 61 ft TDH each. [PCO 016.1]

[PCO 016.1]
[PCO 016.1]

- All four pumps shall be on VFD to allow direct control of pumping rate to maintain Outfall Balancing Tank level and required outfall flow. VFDs shall be furnished on all four pumps to simplify operation

instead of having to juggle operation of constant-speed pumps with variable-speed pumps. [PCO 016.1]
- End-suction centrifugal pumps with epoxy lined casing, stainless steel impellers, and mechanical seals for corrosion resistance and long service-life.
- Manufacturer: Fairbanks Morse/Pentair, Grundfos, Xylem, or equal if approved.

Control Features

- Operated directly by plant PLC system.
- Operators select lead, lag, and lag-lag pumps, or set a pump to be out of service.
- PLC starts or stops pumps and adjusts speed uniformly to maintain low level in Outfall Balancing Tank. In lower flow scenarios, the system will cycle a pump on and off at minimum speed and use the Balancing Tank to equalize the flow as needed to have less than 6 starts on each pump per hour.
- Pumps can be manually operated in the PLC to start/stop and set operating speed if needed.

Operations Purpose

The Outfall Balancing Tank will receive flows from MBR system, SAFE system, or RO train effluent bypass. The ocean outfall pumps deliver water to the Outfall Disinfection Contactor Pipeline for where sodium hypochlorite is added for disinfection. Disinfection requirements are met without including the tank volume. The flow is dechlorinated with sodium bisulfite prior to ocean outfall.

Operations Description

Outfall Balancing Tank

The Outfall Balancing Tank acts as a reservoir for flows from MBR system, SAFE system, or RO train effluent bypass. The tank level is measured continuously, displayed locally and transmitted to SCADA. In the event inflow to the tank is greater than outflow an overflow line directs flow to the ground.

Outfall Pumps

Four VFD driven centrifugal pumps operate periodically to transfer the contents of the Outfall Balancing Tank to the ocean outfall. With the pumps energized control is set locally using the control selector switch (Hand-Off-Remote). In the Hand position the pump runs continuously; in Off the pump does not run; in Remote control is transferred to SCADA. In Remote Auto the pump duty roles are selected lead, lag, and lag-lag pumps, or out of service) are set at SCADA. Selecting Out of Service removes the pump from the control scheme which inhibits associated alarms. At a preset high tank level the pumps start and run continuously. Pump speed is adjusted to maintain a preset flow rate from the outfall pumps. Pump operation stops at a preset low level. In lower flow scenarios, the system will cycle a pump on and off at minimum speed and use the Balancing Tank to equalize the flow as needed to have less than 6 starts on each pump per hour. A flow meter is located on the pump discharge manifold and is used to control the outfall pump speed as well as the sodium hypochlorite feed pumps. [PCO 016.1]

Chemical Feed Systems

Refer to Section 2.11-Chemical Storage and Feed for details on the sodium hypochlorite and sodium bisulfite chemical systems.

Normal Operation

The Outfall Balancing Tank is in continuous operations. The pumps normally operate in Remote Auto as required to meet an adjustable outfall pump flow rate.

Alternative Operation

- The pumps normally operate in Remote Manual through SCADA.
- The pumps may be run locally from the VFDs.

2.14 IPR Product Water Pump Station

The IPR Product Water Pump Station shall convey recycled water to injection wells located in the Morro Valley. Sodium hypochlorite addition for use in IPR treatment credits and pipeline maintenance shall be included.

A large tank shall be provided to store finished IPR (Product) water on-site. IPR Pumps shall be furnished to pump this water to the Morro Wellfield. The IPR (Product) Water Tank shall also be used as flushing water for the Calcite Remineralization System (see below) to clean new deliveries of media. [PCO 001]

A calcite remineralization system shall be provided to buffer IPR water upstream of the Product Water Storage Tank to reduce corrosion potential of the water. The IPR effluent shall pass through a vessel containing calcite which shall dissolve into the water to add hardness, alkalinity and increase the pH in order to reduce corrosion potential for downstream tanks, equipment, and piping.

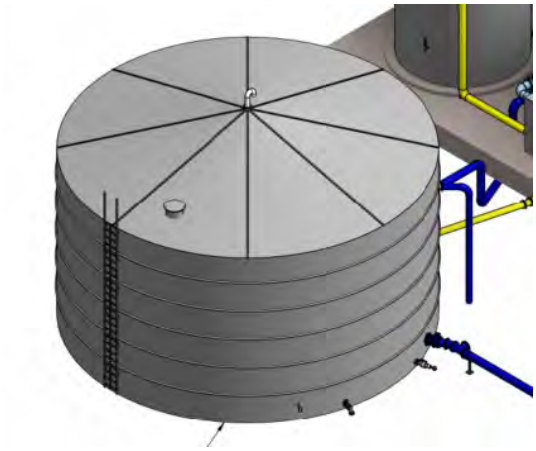

Key Overall Facility Features – Product Water Storage Tank

- 200,000 gallon tank for on-site storage of IPR Product Water. [PCO 019.1]
- IPR Pumps to pump IPR Product Water for indirect potable reuse via groundwater injection at the Morro Wellfield.
- Pump type and materials selected for good efficiency and operating life.
- Pump station design and pump head are dependent on outfall pipeline size and design by others. It is assumed outfall pipeline design will be such that discharge HGL at the pump station will be 166 feet, or lower, above sea level at 646 gpm.
- System shall include vacuum relief valve and VFD slow start to mitigate surge. It shall be assumed pipeline design shall be such that no additional facilities are needed at this pump station for surge mitigation.
- Flow meter for delivered flow monitoring and control.
- Sodium Hypochlorite (chlorine) Injection to maintain residual for transmission and obtain virus reduction credits.

Equipment – Product Water Storage Tank

- 200,000 gallon glass-lined bolted steel tank. [PCO 019.1]
- Vent with bug-screen.
- Low and high level switches.
- Access manway furnished.
- Manufacturer/Fabricator: California Aquastore-CST, Engineering America, or equal if approved

Equipment – IPR Product Water Pumps

- 3 @ 323 gpm @ 63 ft TDH (166 feet HGL) each. 2 duty / 1 standby. Rated to deliver up to full RO production capacity of 0.93 mgd. All three pumps shall be the same size for ease of operation and equipment maintenance.
- All three pumps shall be the same size for ease of operation and equipment maintenance.
- All three pumps shall be on VFD to allow direct control of pumping flow or pressure.
- VFDs shall be furnished on all three pumps to simplify operation instead of having to juggle operation of constant-speed pumps with variable-speed pumps.
- End-suction centrifugal pumps with epoxy lined casing, stainless steel impellers, and mechanical seals.
- Manufacturer: Fairbanks Morse/Pentair, Grundfos, Xylem, or equal if approved

Control Features – IPR Pumps

- Operated directly by plant PLC system.
- Operators select lead, lag, and lag-lag pumps, or set a put to be out of service.
- PLC starts or stops pumps and adjusts speed uniformly to maintain either operator input flow setpoint or pressure setpoint.
- Pumps can be manually operated in the PLC to start/stop and set operating speed if needed.

Operations Purpose

The IPR Product Water Storage system provides operational storage and pumping of the disinfected product water. The storage tank supplies the recycled water pumps, on-site reclaimed water pumped. In the event the tank level reaches the overflow pipe product water overflows onto the ground. [clarification] Chemicals are added before flow enters the tank to stabilize the water. Sodium hydroxide is added to lower the pH to reduce the corrosive nature as water is conveyed distribution areas. Sodium hypochlorite is added to maintain chlorine residual in the distribution system.

Operations Description

The Product Water Storage Tank is level is measured, displayed locally and transmitted to SCADA. The tank has switches that are used to activate the High-High and Low-Low Levels. Tank discharge water is monitored for chlorine residual, conductivity and pH. Values are transmitted to SCADA.

The tanks supply the product water pumps which transfer product water to the groundwater discharge. Pump controls are set locally. In the Hand position the pump are operated locally using Start and Stop pushbuttons and the speed adjusted using a potentiometer; in the Off position the pumps to not run; in the Remote position control is passed to SCADA. Pump pressure is displayed locally. Pump duty selection (lead, lag, and lag-lag pumps, or set a put to be out of service) is set from the configuration screen. In the event the lead pump fails the lag pump is promoted to the lead pump role; should the lag pump fail the lag-lag pump is promoted to the lag pump role. When a pump is selected as out of service the pump is taken out of the control loop. The pump start, stop and adjust speed to maintain the input flow setpoint or pressure setpoint. A pressure switch located on the pump discharge generates an alarm to SCADA and shuts down a pump.

The product water pump discharge to a common manifold. Flow, discharge pressure and pH are measured, displayed locally and transmitted to SCADA.

Normal Operation

Normally the system operates in Remote Auto with all pumps in service and each pump selected for a duty role (lead, lag and lag-lag).

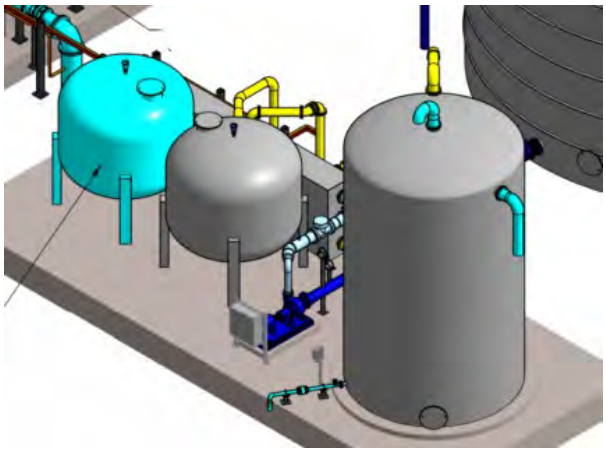

Key Overall Facility Features – Calcite Contactor System

- Upflow pressure vessels containing calcite to stabilize the RO effluent.
- Flush pump to remove fines when media is periodically loaded.
- Flush Tank to receive the calcite vessel flush flow before disposal to not overwhelm the drain system.
- Manual isolation valves for operation.

Equipment – Calcite Contactor Vessels

- Two vessels provided, sized to allow for the entire flow to pass through a single vessel so that the other can be taken offline for service or media loading.
- Painted carbon steel construction with epoxy interior coating.
- Manufacturer: Wigen Water Technologies, Tonka Water, or equal if approved.

Equipment – Calcite Contactor System Flush Pump

- One flush pump provided due to infrequency of washing.
- End suction centrifugal pump to be supplied as part of Calcite Contactor System Package.
- Manufacturer: To be determined by Calcite Contactor System Manufacturer.

Control Features – Calcite Contactor System

- Manual device, with alarms provided to indicate high differential pressure.
- Backwash sequence is manually initiated and executed.

Operations Purpose

The remineralization system adds minerals that were taken out during the RO process back into the UV effluent to stabilize the water.

Operations Description

Calcite Vessels

UV effluent shall pass through a vessel containing calcite which will dissolve into the water and add hardness, alkalinity and increase the pH to protect downstream equipment from corrosion. The system is designed to permit full plant flow through the online (duty) vessel. A second vessel is used in a standby role when the duty vessel requires while cleaning. UV effluent flowing through the online vessel dissolves some of the media to a neutral pH (about 7.0) and delivers stabilized water to the Product Water Tank (PWT). Manually operated valves are used to position one tank for duty and one for standby. Pressure is monitored locally on the vessel inlet and out. The differential pressure is measured across the media bed in each vessel. At a preset high differential pressure a switch is energized which generates an alarm to SCADA. The Operator then switches vessels to maintain UV effluent remineralization. The offline vessel is configured to discharge to the BHT and the Flush Pump is energized.

It takes around 20 minutes at 15 gpm/ft^2 to clear fines out of new calcite. The BHT has a small pipe that contains a motor operated valve that bleeds the contents out over 24 hours to the plant sewer and thus to the head of the plant. Regulating the rate in this manner insures that the plant is not upset.

Flush Pump

The Flush Pump is controlled locally from the local control panel (LCP). With the control selector switch in the Local position the pump is controlled using the Start/Stop handswitch. In the Start position the pump runs continuously; in the Off positon the pump does not run. In the Stop position the pump does not run. With the control selector switch in the Off position the pump does not run; in the Remote position pump control is transferred to the PLC and operation set through SCADA. Pump speed can be adjusted locally or through SCADA. Pump discharge pressure is displayed locally. The pump will shut down on high temperature or motor overload. Pump status, operating mode and alarms are transmitted to SCADA thru the PLC.

Backwash Holding Tank (BHT)

BHT level is measured and displayed locally and the level transmitted to SCADA. In the event of a high tank level an overflow directs the water to the ground. A motorized tank drain is used to drain the tank contents to the sewer or storm drain. Controls are mounted on the valve actuator. With the control selector switch in the Local the valve is set using the position handswitch. In the Open position the valves opens; in the Off position the valve does not move; in the Closed position the valve shuts. Valve status, operating mode and alarms are transmitted to SCADA thru the PLC. In the Remote position control is transferred to SCADA where the valve can be opened or closed. A flow meter is located on the drain line and measures, displays locally and transmits the flowrate to SCAD.

Normal Operation

One vessel is normally on line and the Flush Pump is Off. Vessel discharge is directed to the PWT.

Abnormal Operation.

On high differential pressure the offline vessel shall be placed online and the originally online vessel shall be have the inlet and PWT outlet line shut. The BHT outlet line shall be opened and the Flush Pump run for a period of 20 minutes

2.15 Product Water Storage Tank

The Product Water Storage Tank shall provide operational storage for the recycled water. Tank information is provided in Section 2.14.

2.16 On-site Reclaimed Water System

The On-site Reclaimed Water System shall be designed and constructed to provide water for washdown, foam and scum control, screening/grit washing, landscape irrigation and other suitable applications. The on-Site Reclaimed Water System shall be designed to operate between 60 and 80 psi.

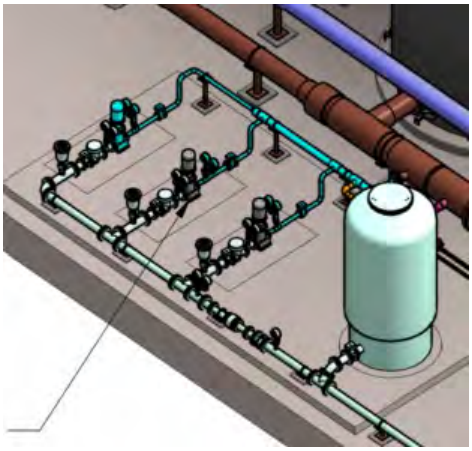

[PCO 001]

Key Overall Facility Features

- Pumps to deliver IPR water from the RO Feed Tanks [PCO 001] into a plant-wide recycled water distribution system.
- 500 gallon air-bladder tank to supply low demands below minimum pump flow rates.
- Pump type and materials shall be selected for good efficiency and operating life.
- Hydraulic calculations demonstrating system sizing shall be furnished during design.
- On-site reclaimed water shall be used for appropriate plant water uses such as scum spray and washdown where appropriate. Washdown bibs shall be provided with hoses, racks and appropriate signage.
- Flow meter for delivered flow monitoring.
- NaOCl feed, including new feed pump in chemical area [PCO 001]

Equipment – Onsite Recycled Water Pumps

- 3 pumps rated for 75 gpm @ 175 ft TDH each. lead/lag for normal plant demands. 2 duty for higher demand periods such as large washdown demands or irrigation with normal plant demands. [design development]
- Pumps are the same size for ease of operation and equipment maintenance. [design development]
- Pumps on VFD to allow direct control of distribution pressure. VFDs shall be furnished on both pumps to simplify operation instead of having to juggle operation of one constant-speed pump and one variable-speed pump. [design development]
- Manufacturer: Fairbanks Morse/Pentair, Grundfos, Xylem or equal

Equipment – Air Bladder Tank

- One 500 gallon air-bladder tank to supply low demands between pump operation cycles.
- Manual charging of the air-bladder is done semi-annually with a portable compressor.
- Steel vessel with EPDM or similar bladder. All wetted steel components are epoxy lined.
- Manufacturer: Amtrol WellXTroll, or similar.

Control Features

- Shall be operated directly by plant PLC system.
- Operators shall select lead and lag pumps, or set a pump to be out of service.
- PLC shall start or stop pumps and adjusts speed uniformly to maintain set distribution pressure. If distribution pressure continues to rise with one pump in operation at minimum speed, that pump shall cycle off and allow the air-bladder tank to supply those low demands. The pump shall automatically restart when distribution pressure dips indicating the air-bladder tank is not keeping up with demands.

Operations Purpose

The Onsite Recycled Water Pump Station supplies water from the Product Water Tank to various non-potable water demands on the site such as irrigation, process sprays, and washdown.

Operations Description

Pump controls are set locally. With the control selector switch in the Local position the pump are operated using Start and Stop pushbuttons and the speed adjusted using a potentiometer; in the Off position the pumps to not run; in the Remote position control is passed to SCADA. Pump pressure is displayed locally. Pump duty selection (lead, lag or set a put to be out of service) is set from the configuration screen. In the event the lead pump fails the lag pump is promoted to the lead pump role; the third pump is used as a standby pump. When a pump is selected as out of service the pump is taken out of the control loop. In Remote Auto the pump(s) start or stop and adjusts speed uniformly to maintain set distribution pressure. If distribution pressure continues to rise with one pump in operation at minimum speed, that pump will cycle off and allow the air-bladder tank to supply those low demands. The pump will automatically restart when distribution pressure dips indicating the air-bladder tank is not keeping up with demands. The pumps discharge to a common manifold where flow, discharge pressure and pH are measured, displayed locally and transmitted to SCADA.

Normal Operation

Normally the system operates in Remote Auto with two pumps selected for service and pump duty roles selected (lead | lag). The air bladder tank equalizes differences between the pump output and the system demand without operator intervention.

2.17 Vactor Washdown Area

The Vactor Washdown Area shall be designed and constructed to provide a location for dumping sewage from the City's vactor trucks. The Vactor Washdown Area shall be paved with curbs, and include two areas, each sized to allow washdown of a full vactor truck, with sloping concrete floors draining to a sump. The sump shall transport materials to the headworks. Hoses and hose racks shall be furnished for washdown. At owners request the Vactor Washdown Area will also have a K-rail barrier in front of the grating, a isolation gate on the drain, and a weir in the first Manhole downstream of the Area. [PCO 107]

SECTION 3 ARCHITECTURAL AND LANDSCAPING CRITERIA

3.1 General

Provide a facility that is durable, low maintenance, and aesthetically compatible with the community. Provide buildings that meet the space needs as described herein. Architectural finishes are specified to provide an example of the quality and durability that the City desires.

Architectural and Landscaping Features/Scope are summarized in the table below and detailed further within Section 3. The summary table shall govern in event of a disagreement with content in Section 3.

[PCO 002]

Key Overall Architectural Features

- Buildings for the Operations Facility, Maintenance Facility, and RO/UV (Advanced Treatment) Building
- Various canopies for parking areas, outdoor process equipment, and general storage
- Landscaping and Screening in strategic locations around the WRF site to enhance the visual presentation of the site to the public and adjacent property owners

Architectural Purpose

To provide an overall aesthetic scheme for the WRF including conceptual building and canopy exteriors, landscaping plans which present the WRF as an agricultural facility consistent with current property use. Also, provide durable, low maintenance facilities in conformance to controlling structural criteria and considering the intended use of each facility within the WRF process scheme.

Architectural Description

- The Operations Building will be the focal point of the WRF aesthetic presentation to the community as this building will be located at the “front” of the plant relative to the site entrance and the nearby scenic Highway 1. The facility is planned as a metal building with non-ferrous and coated metal wall panels, 4-ft tall burnished CMU wainscoting and non-ferrous, metal roof panels. Since it is at the front of the site, it will also have two cupolas for architectural appeal, which will also aid in ventilation of the building. [PCO 002]
- The Maintenance Building and RO/UV Building are planned adjacent to one another in the middle part of the plant. These buildings are planned with similar finishes to the Operations Building but without the cupolas. [PCO 002]

- Various covered parking canopies and canopies covering outdoor process equipment in the MBR and Dewatering Areas are also planned. Roofing materials for the canopies are planned to generally match those of the buildings.
- Landscaping will generally be a mix of larger, stand-alone trees such as California sycamores and live oaks. Where screenings areas are needed adjacent to the visitors parking area, next to the MBR facility, and in the area across the 2-lane plant road near the Maintenance Building, decorative grasses and small bushes are planned. Finally, stormwater basins are planned as grass-lined with some internal planting such as tall grasses. These basins are planned with overflow outlets to help promote infiltration into the soil and improve water quality of runoff.

3.2 Applicable Codes

All facilities provided shall comply with all the current building, fire, or other health and safety codes and regulations applicable to the project site including:

- California Building Code
- California Plumbing Code
- California Mechanical Code
- California Fire Code
- California Electrical Code
- California Building Energy Efficiency Standards
- California Green Building Standards Code
- California Coastal Zone Management Act

Note that the project site is currently located within a Moderate Fire Hazard Severity Zone in a State Responsibility Area and the provisions of CBC Chapter 7A apply. The project site is also located within a Coastal Zone and is located off of a designated State Scenic Highway. The provisions of the Coastal Zone Management Act and the local Coastal Zone Land Use Ordinance also apply.

3.3 Buildings

3.3.1 Operations Building

The Operations Building will serve as the administrative hub for the facility. It will be the location at which visitors to the facility check in when arriving at the facility. The entrance to the building should be apparent when approaching the facility. The rear entry to the building should be approachable by vehicles for staff and for pick up and return of samples to the sample storage rooms. The break room should be adjacent to an outdoor patio area of similar size for use by staff. The patio area should be shielded from view by an enclosure. The Operations Building shall be fully ADA accessible throughout.

3.3.2 Maintenance Building

The Maintenance Building will have a drive through bay for service vehicles. The Maintenance Building will also have one additional bay to provide more work space [PCO 021]. All roll up door jambs to be protected by concrete filled steel pipe bollards on the exterior. One motorized rollup door shall be provided on the drive through bay. [PCO 045] The bottom 48 inches of the shop and storage area walls shall be solid grout CMU or

concrete on the interior. The lab should incorporate the City's existing lab equipment and provide sufficient counter top work surfaces to support the function of the lab. City will provide DB with list of existing equipment.

3.4 Aesthetic Design

The building site will be visible from Highway 1, which is designated as a Scenic Corridor. Building forms and exterior materials shall be consistent with the character and themes described herein. Generally, the building forms used should be recognizably agricultural, using simple rectangular floor plates and gable roofs of varying slopes that reflect the use of the enclosed volumes. These building shapes are articulated where appropriate with clerestories or roof vents, again in familiar proportions.

While individual buildings should reflect their use, the overall impression of the complex from the public right of way should be of a dairy farm or ranch. Colors should be muted off whites and earth tones on the buildings and roofs should be a soft terra cotta red or similar color.

Architectural design themes shall be approved by the City.

3.5 Exterior Materials

3.5.1 Walls

Exterior wall finishes are to be durable, noncombustible, and perform well in the coastal environment such as exposed concrete, exposed CMU, metal siding, fiber cement siding, or plaster. There shall be no ferrous metal siding or wood exposed on the exterior of the structures.

Exposed concrete walls are to have reveals at control joints and at cold joints. See Structural requirements below for additional requirements for exposed concrete walls.

Masonry walls or veneer shall generally be integral colored split face where exposed to view. Precision block is not allowed where it is exposed to view. Control and expansion joints shall be located to control cracking. CMU walls or veneer shall conform to ACI 530. See also Structural requirements below for CMU walls.

Metal siding shall be aluminum shall have a minimum thickness of 0.040 inches and shall conform to ASTM B209. Siding shall have a high performance organic coating finish such as Kynar 500 and shall come with a manufacturer's 20-year warranty for watertightness, color fading, and chalking. Metal siding shall not be used within 48 inches of the finished grade.

Fiber cement siding, trim, and soffit materials shall be conform to ASTM C1186 and shall be covered by a manufacturer's 30-year warranty. If panel siding is used it shall be finished with fiber cement battens at no more than 12 inches on center. If lap siding is used it shall have a maximum exposure of 7 inches. All trim is to be fiber cement.

Plaster shall conform to ASTM C296 and shall be installed over metal lath as part of a three coat system and shall have a smooth troweled 100% acrylic based finish. Lath shall conform to ASTM C847 and ASTM C1063. Casing beads, corner beads, expansion joints, control joints and other exposed lath accessories shall be aluminum or PVC. Control joints and reveals shall be located to minimize cracking. Fiber reinforced plaster systems may be used to reduce or minimize control and expansion joints following manufacturer's recommendations.

Weather barrier provided under any siding shall be a vapor permeable membrane, either spun polyolefin fabric or liquid applied. Weather barrier shall be approved by manufacturer for up to 210 days of weather exposure. All window, door, and other openings shall be flashed with a compatible system as recommended

by the weather barrier manufacturer. Grade D building paper is only acceptable as the second layer under a lath and plaster system.

3.5.2 Roof

The roof is to be low maintenance and long lasting. The preferred roofing would be metal standing seam roofing where exposed to view. In other areas where a flat roof is not visible a single ply roof membrane would be acceptable.

Metal roofing shall be aluminum, shall have a minimum thickness of 0.040 inches, and shall conform to ASTM B209. Roofing shall have a high performance organic coating finish such as Kynar 500 and shall come with a manufacturer's 20-year warranty for water tightness, color fading, and chalking. Roof panels shall have a minimum seam height of 2 inches and installation shall follow manufacturer's recommendations to obtain the specified warranty.

Thermoplastic membrane roofing shall be a minimum of 80 mil and shall be UL Class A and shall conform with FM DS 1-28. Installation, including deck sheathing and insulation shall conform to manufacturer's recommendations. Provide a 20-year non-prorated warranty including materials and labor and not excluding ponding water or wind speeds less than 90 mph for the roof.

Roof accessories such as roof hatches, flashings, and gutters shall be aluminum. Roof hatches shall be thermally broken and shall be provided with a minimum of a 5-year warranty. Gutters shall be provided with means to prevent the accumulation of leaves and debris as required by CBC chapter 7A. Flashings and gutters shall have the same finish as the roofing.

3.5.3 Windows

Windows shall comply with the requirements of the California's Title 24 and may be aluminum or fiberglass. Clear or minimally tinted glazing is preferred. Tempered glazing shall be provided where required. Windows shall comply with the performance requirements of AAMA and shall include a system for internal weep drainage and shall be thermally broken. Windows shall be fixed or operable hopper windows and shall not project past the inside face of the wall more than 4 inches. The On-Call room shall be provided with a window that complies with CBC 1030. A security window shall be provided to the interior wall of the Operations Building. See Attachment 1. [PCO75] All operable windows shall be provided with non-ferrous insect screens.

3.5.4 Louvers and Vents

Louvers and vents shall comply with CBC chapter 7A and shall comply with ASTM E2886. Louvers and vents shall be aluminum or fiberglass.

3.5.5 Doors

Exterior doors shall be molded fiberglass reinforced plastic and shall have fiberglass reinforced plastic frames with no metal or wood components. Accessories such as glazing stops and louvers shall be fiberglass. Doors and frames shall have an ultraviolet stabilized polyester, marine grade NPG-isophthalic, with low luster unpatterned final finish a minimum of 25 mils thick. Doors and frames shall have a manufacturer's standard 10-year warranty covering degradation or failure due to chemical attack.

Overhead coiling doors shall be capable of withstanding maximum positive and maximum negative wind loads as described in the California Building Code design criteria without undue deflection or damage to components. Doors shall be of standard construction for normal use of up to 20 cycles a day and an expected lifetime of a minimum of 50,000 operating cycles. Where placed on air-conditioned spaces, roll-up doors shall be insulated with a minimum R value of 8.0 and a STC rating of 22 for the entire door assembly. The

steel curtain shall be minimum of 18 gauge on the exterior face. Guides and other exposed components shall be galvanized steel. Operation shall be manual via a chain and shall lock with a slide bolt from the inside. Installation shall comply with manufacturer's recommendations. In the Water and Collections Supply Storage Shed, provide two 12-foot wide overhead coiling doors. [PCO 79]

3.5.6 Exterior Steel [Clarification]

Exterior steel items are generally to be avoided due to the highly corrosive coastal atmosphere however there are times when there is no suitable alternative, such as bollards to protect roll up door openings. When used in exterior applications all steel shall be hot dip galvanized, coated with an epoxy paint and then a finish paint. Assemblies shall be fabricated such that components can be joined together with slip jointed fittings or bolted together. Field welding of assemblies is to be avoided. If provided, exterior barrier and handrails shall be hot dip galvanized but are not generally required to be painted.

3.6 Interior Materials and Building Elements

3.6.1 Walls

Gypsum board walls shall be constructed following GA-216 with 5/8 inch board. Interior finishes, per ASTM C840, shall be level 3 in service areas and areas to receive a wall covering, level 4 in areas to receive a light textured finish and egg shell or matt paint (typical), and level 5 in areas to receive a semi-gloss finish. Mold resistant gypsum products shall be used within 10 feet of a sink or other plumbing fixture. Textured surfaces should receive a light to medium orange peel finish. Walls at offices shall be acoustically sealed at the floor and at penetrations in the wall. Where possible penetrations shall be staggered.

Tile on walls shall follow the Tile Council of North America (TCNA) recommended procedures for each application and substrate. Wall tiles shall be standard 4x4 ANSI A137.1 semi-gloss glazed wall tile. Tile on walls in toilet and shower rooms shall be a minimum of 7 feet tall and shall run continuously behind any applied fixtures such as mirrors. Utilize tiles with matching bead, bullnose, cove, and base shapes. Grout shall be polymer modified cement per ANSI A118.7. Provide waterproof membrane at all showers and within 24 inches of sinks.

Fiberglass reinforced paneling shall comply with ASTM D5319. Trim should be PVC in a color to match panel. Panels to be installed as per manufacturer's recommendations.

Insulation shall be installed at all interior partition walls for acoustics. Insulation shall fill the cavity space and shall comply with ASTM C665. Insulation shall be formaldehyde free.

Corner guards shall be provided on outside corners of walls unless covered in tile. Corner guards shall be stainless steel or vulcanized rubber consistent with ASTM F1861.

3.6.2 Ceilings

Gypsum board ceilings shall be constructed following GA-216 with 5/8-inch board. Interior finishes, per ASTM C840, shall be level 3 in service areas and areas to receive a wall covering, level 4 in areas to receive a light textured finish and egg shell or matt paint (soffits), and level 5 in areas to receive a semi-gloss finish (toilets and showers). Mold resistant gypsum products shall be used within 10 feet of a shower. Textured surfaces should receive a light to medium orange-peel finish.

Acoustic tile ceilings and suspension systems shall comply with ASTM C635, ASTM 636, and ASTM E1264. Installation of grid shall conform to ASTM E580 for areas subject to earthquake ground motions and shall be heavy duty. Ceiling tiles shall be regular and shall have minimum NRC of 0.75 and a CAC of at least 35.

3.6.3 Floors

Polished concrete floors shall be consistent with the Retroplate system as a level of quality. Concrete floors shall be stained, utilizing a minimum of two colors. Concrete after treatment for polishing shall exhibit a uniform level of grind in each space or area. Final polish shall have a hard-shell satin finish (400 grit).

Sealed concrete shall be achieved with a liquid densifier hardener that penetrates into the concrete and reacts with the concrete to create a dustproof sealed finish.

Tile on floors shall follow TCNA recommended procedures for a full mortar bed application in a wet location. Floor tiles shall be ANSI A137.1 standard grade ceramic mosaic tile. Grout shall be polymer modified cement per ANSI A118.7 and shall be sealed with a water based colorless silicone. Provide waterproof cleavage membrane at all floors.

Wall base shall be consistent with ASTM F1861, Type TS vulcanized rubber a minimum of 4 inches tall and shall have a satin finish.

Underslab vapor barrier shall be provided continuously under all floor slabs for enclosed buildings and shall comply with ASTM E1745 Class A with a minimum thickness of 15 mils and a water vapor permeance of not more than 0.010 perms.

3.6.4 Doors

Interior doors and frames shall be hollow metal and shall conform to SDI-100 standards for Level 2 heavy duty doors. Doors shall be full flush with a face gage of at least 18 and shall have an A60/ZF180 galvannealed coating. Hollow metal door frames shall be full profile, continuously welded type with a minimum of 16-gauge steel. Doors and frames shall be rated as required by code.

At shower room provide removable fixed door and frame capable of being relocated without the use of any special tools to adjust the ratio of men’s and women’s shower stalls.

Access doors shall be provided where required to access plumbing or attic spaces. The minimum size of an access door shall be 12 inches by 12 inches. Access doors in drywall or plaster shall use a bead type frame. Access doors shall be factory fabricated doors and frame units with welded corners, filled and ground flush. Minimum thickness of frames shall be 16 gauge and of doors shall be 14 gauge. Doors located in wet areas or in tile shall be stainless steel. Doors shall be equipped with a latch with a screw driver slot to operate. Doors that are intended for the passage of a person shall have a latch that is operable from an interior space.

3.6.5 Casework

Cabinets shall be constructed per AWI/WI standards for premium grade with Style A frameless construction with flush overlay door and drawer fronts. Millwork supplier shall furnish a W.I. certificate of compliance. Installer shall provide a Certified Seismic Installation Report confirming that acceptable backing is provided in all locations. Cabinet faces, doors, and exposed surfaces shall have NEMA LD 3 type high pressure laminate faces. Interior surface shall have a melamine finish. Doors and drawer fronts shall have a 3mm PVC edge. Pulls shall be closed wire loop type with a stainless steel finish. Drawer sides shall be commercial grade, side mounted. Drawer slides for drawers deeper than 6 inches shall be side mounted self-closing type with full extension. Hinges shall be stainless steel 5 knuckle 270-degree swing hospital type. Clear silencers shall be installed at each cabinet door.

Countertops

Plastic laminate countertops shall be NEMA LD 3 type high pressure laminate with a minimum nominal thickness of 0.048 inches. Countertops shall have a front edge laminate built up to 1 ¼ inch thick with a raised radiused edge, integral coved backsplash and radiused top edge. The back and end splashes shall be of the same construction. Backsplash shall be a minimum of 4 inches tall. Exterior grade plywood backing shall be used at all wet locations. Provide backer sheet on underside of countertop substrate. No seams shall occur within 18 inches of a sink and sink cut outs shall be sealed.

Lab Countertops

Solid epoxy resin countertops shall be used in the lab. The physical properties of the lab surface shall be consistent with Durcon epoxy resin countertops as a standard of quality. Countertops shall have a marine edge and shall be a minimum of 1 inches deep. Material shall be covered by a manufacturer's standard 10-year warranty to repair or replace any defective material at no cost to the City.

3.6.6 Hardware

Provide each type of door hardware from only one manufacturer. All hardware shall comply with provisions of CBC chapter 11B for accessibility. All doors to be commissioned prior to occupancy to assure that all the aforementioned requirements are met in the installed doors. All door hardware shall be satin finish stainless steel.

Locks and latches shall be provided for each door with appropriate function for the space. Locks shall be standard interchangeable core and shall utilize Schlage Everest 29 7 pin cylinders.

Hinges shall be stainless steel five-knuckle full mortise butt hinges. Provide non-removable pins and security studs at all exterior out-swinging doors. Hinges shall allow doors to open to maximum width. Provide ball-bearing hinges at all doors having closers.

Exit devices shall be push-through push-pad design and shall be independent lab tested to 1,000,000 cycles. No exposed push-pad fasteners, no exposed cavities when operated. Lever shall be breakaway type.

Closers shall be full rack-and-pinion type cylinder with removable non-ferrous cover and cast iron body and shall be independent lab tested to 1,000,000 cycles. Closer to have double heat-treated pinion shaft, single piece forged piston, and chrome-silicon steel spring. Closer to have separate adjusting valves for closing speed, latching speed and backcheck, fourth valve for delayed action where required. Exterior door closers shall have been tested to 100 hours of ASTM B117 salt spray test. Pressure Relief Valves (PRV) not permitted. Closers to be installed on each door that leads to the exterior. Doors from break room to exterior and from shop to exterior are to be equipped with a hold open function.

Gaskets are to be provided at each exterior door at top, sides, and meeting stile or pairs. At each exterior door provide door bottom sweep.

Protection plates are to be provided on the push side of each door equipped with a closer.

Floor stop, overhead stop, or wall protection bumper are to be provided for each door.

Thresholds shall be provided at all exterior doors and shall comply with CBC Chapter 11B.

Door silencers are to be provided at all doors not otherwise provided with gasketing.

3.6.7 Stretched Fabric Wall Panels

Stretched fabric wall panels are to be provided in the break room and the conference room. Field installed, fabric is stretched and set into framework and laid over acoustic material anchored to substrate. Framework consists of continuous perimeter and intermediate mounting frames anchored to substrate, and designed to permit removal and replacement of fabric within framed areas without affecting adjacent areas. Installed system shall have a NRC of 0.70 minimum, when tested in accordance with ASTM C423, Type A mounting. Prefabricated, fabric covered and individually framed panels are not permitted. Fabric to be installed over acoustic material and into framework without use of adhesives, tapes, or fasteners. Seams in fabric are not permitted; base the frame layout dimensions on fabric at least 66-inch-wide. Fabric shall be class I per ASTM E84. Acoustic material shall be 100% polyester with zero volatile organic compounds or formaldehyde.

3.6.8 Marker Boards

Marker boards shall be proved as indicated on the room forms. Marker boards to be porcelain enamel on minimum 24 gauge steel, laminated to core. Frame to be extruded aluminum with concealed fasteners and corner guards. Each markerboard shall include a full-length aluminum tray. Markerboard to be covered by manufacturer's 20-year warranty against discoloration due to cleaning, crazing or cracking, and staining.

3.6.9 Signage

Signage for identification and wayfinding shall be provided. Signage shall be visible at the entrance road to the facility and another sign shall be visible at the exterior of the building. Entry and building identification signage shall be free standing.

Signage for room identification shall be provided at the facility to identify each space at each door. Space identification signage shall comply with CBC Chapter 11B, Division 7. Signs shall be of engraved construction on fiberglass (exterior) or melamine (interior) plastic. Acrylic and photopolymer substrate are not acceptable.

Signage for parking stalls as required by CBC Chapter 11B shall conform to the requirements of the code.

3.6.10 Toilet Compartments

Toilet compartments shall be provided as described on plans or as required. Partition configurations shall comply with the requirements of CBC Chapter 11B. Partitions may be HDPE or solid phenolic. All hardware shall be aluminum or stainless steel. Partitions shall be overhead braced.

3.6.11 Toilet, Bath, and Laundry Accessories

Toilet, bath, and laundry accessories shall be manufactured by a company specializing in the manufacture of such accessories with a minimum of 10 years' experience. All accessories shall be ASTM A666 type 304 stainless steel with a number 4 brushed finish.

Accessories to be provided include:

Toilet Paper Dispensers: Two roll capacity
Paper Towel Dispensers: Fan fold
Electric Hand Dryers: High velocity capable or drying hands in 12 seconds
Soap Dispensers: liquid
Mirrors: Stainless steel framed, full height at locker rooms, 18 by 36 inches at each lavatory.
Seat Cover Dispensers
Grab Bars: Satin finish, concealed fasteners
Sanitary Napkin Disposal Units

Utility Shelf with Mop and Broom Holder
Shower Rods
Shower Curtains
Robe Hooks
Flip up Shower Seat at Fully Accessible Shower Stalls

3.6.12 Lockers

Lockers at shower rooms shall be metal. [PCO 47.1] Lockers shall be single tier a minimum of 15 inches wide by 18 inches deep and 72 inches tall. Lockers shall have sloped tops, shall be fully ventilated, standard hasps, and shall include a stainless steel coat rod. Lockers shall be placed on a raised concrete curb with a tiled face.

Lockers for gear and personal equipment storage shall be HDPE with antimicrobial additive tested per JIS Z2801 to be greater than 4.0 efficacy rating. Lockers shall be single tier a minimum of 24 inches wide by 24 inches deep and 72 inches tall. Lockers shall have sloped tops, shall be fully ventilated, standard hasps, and shall include a stainless steel coat rod.

3.6.13 Fire Protection Specialties

Fire extinguishers shall be provided as required by code and shall comply with NFPA 10. Extinguishers may be surface mounted.

3.6.14 Residential Equipment

Residential equipment shall be provided as shown on conceptual layouts and described herein. Finishes shall be stainless steel or similar color painted finish at washer and dryer.

- Microwaves
  - Countertop style
  - 1000 watt minimum
  - 1.1 cubic foot minimum
- Range
  - Size: 30 inches
  - Capacity: Minimum of 5.0 cubic foot
  - Type: Electric radiant heat elements with porcelain top
  - Controls to be mounted on front surface of range
- Refrigerator
  - Energy Star rated
  - Bottom freezer
  - Ice maker
  - LED lighting
  - Ice/water filter
  - Interior filtered water dispenser no higher than 48 inches to controls
  - Minimum capacity 24.5 cubic feet
  - [PCO 47.1]
- Dishwasher
  - Energy Star rated
  - Internal water heater
- Washer
  - Energy Star qualified
  - Front loading
  - Minimum capacity of 4.5 cubic feet

Dryer
- Electric
- Controls located on the front face
- Dryer and Washer to be a matched set by the same manufacturer

3.6.15 Furnishings

Furnishings shall be provided in all spaces to support the intended use of the room. Including desks, tables, chairs, work benches, lab benches, and other office furnishings equipment to support the intended use of the room and as described.

Shop and storage areas shall be provided with work benches, storage cabinets, storage shelves, a work sink, and permanently mounted compressed air lines with quick connect couplings compatible with the City's existing tools and equipment. [PCO 47.1] The DB shall coordinate with City for relocation and reuse of any existing equipment.

Lab area shall be furnished with all cabinetry and ventilation systems to provide an efficient and effective working area. The DB shall coordinate the relocation and reuse of existing City laboratory equipment necessary to perform the on-site sample analysis required for compliance with all applicable agencies and process control. An eyewash/shower station shall be provided near the Lab and Shop.

3.6.16 Fire Protection System

Fire Sprinkler system shall be provided where required by CBC and shall include everything required for a complete system including underground supply lines, backflow preventer, fire department connection, and valve tamper switches tied into fire alarm system. All equipment shall be in compliance with NFPA #13 standards. Furnish and install signs as required. Sprinkler heads shall be aligned with ceiling components.

Where sprinklers are required in electrical supply rooms the fire sprinkler system provided shall be a double interlocking preaction system. This system shall consist of a dry pipe valve and a pre-action valve. To activate water flow, both the preaction valve must be activated by the supplemental detection system and the sprinklers must activate. The system shall be NFPA approved.

Where sprinklers are required in computer and communication rooms the fire protection system must be a waterless system approved for use with sensitive computer equipment. The system shall be fully self-contained with cylinders and control panel located within the room. The system must include a warning alarm that the system is pending activation. The system shall be NFPA approved.

The fire alarm shall simultaneously contact the fire department and annunciate in the operations control room when any alarm is activated.

3.6.17 Domestic Plumbing

Plumbing systems shall be complete as required by CBC. Toilet and restroom fixtures (toilets, lavatories, urinals) shall be vitreous china. Sinks shall be stainless steel. Showers shall be furnished with single piece terrazzo shower receptors including at fully ADA compliant shower provided for each locker room. Water in recessed box shall be provided for ice maker at break room. Floor drains with automatic trap primers shall be provided in all restrooms and locker rooms. Provide water hammer arrestors as needed. Provide key operated hose bibs on each accessible face of buildings. Provide hot water supply sufficient for each building's needs including lab and shop sinks. Provide telephone shower near staff entry to Operations Building for wash down of boots or protective clothing. Wash down shower to be connected to the sanitary sewer and protected from storm water.

Waste, vent, sewer and storm lines shall be of cast iron soil pipe and fittings and shall conform to the requirements of CISPI Standard 301, ASTM A-888 or ASTM A-74 for all pipe and fittings.

Domestic Water Service

Below grade (water service) shall be as follows:

- 3" NPS and smaller: Schedule 40 PVC Plastic Pipe and fittings. ASTM D1785, D2466, with Solvent Cement Joints ASTM D2564.
- 2" NPS and smaller: Type K Soft Annealed Temper Copper Tube ASTM B88 with wrought copper pressure fittings, ANSI B16.22. SIL-FOS - High Temperature Brazing Metal Filler.

Above grade (distribution system) shall be as follows:

- Pipe: For soldered, brazed and mechanical joints, 4" and smaller Copper Water Tube Type L Annealed Temper (Hard Drawn) ASTM B75 or ASTM B88. All underground water piping within the building boundaries shall be ASTM B88-93a Type "L" annealed (soft) copper tube made up without fittings below the floor level.
- Fittings: Wrought copper pressure solder fittings, ASME B16.22 or ASME B16-25,95-5 Tin-Antimony Filler Metal.

3.6.18 Heating Ventilation and Air Conditioning

Heating ventilation and air conditioning systems shall be in conformance with CBC/Title 24 requirements. All regularly occupied spaces in the Operations Building shall be provided with both heat and air conditioning. Shop support spaces and Lab shall be provided with heat and ventilation. Shop shall be provided with provision for radiant heaters to be installed at some time in the future at work areas.

Sheet Metal Ductwork including Rectangular supply, return, outside air and exhaust ducts, single leaf dampers and plenums shall be fabricated from prime grade galvanized steel sheets of lock form quality and shall be constructed in accordance with appropriate tables of the latest ASHRAE "Guide and Data Book" and SMACNA "HVAC Duct Construction Standards" handbook and Chapter 6 of the California Mechanical Code, current edition. Each duct or plenum shall be diagonally cross-broken for rigidity.

3.6.18.1 Flexible Ductwork

Flexible ductwork shall consist of an inner core having two layers of polyester film encapsulating a steel wire helix surrounded by a blanket of fiberglass insulation and sheathed in a metalized polyester vapor barrier reinforced with fiberglass scrim. All air ducts shall be UL listed under the UL-181 standard as a Class 1 Air Duct also conforming to NFPA standards 90A and 90B. This air duct shall have a certified thermal resistance rating of R-8 in accordance with ASTM C518 at 75 degrees F and carry the ADC “Thermal Performance” seal. Use only the minimum length required to make the connection. In no case shall any section of flexible duct exceed 7 feet in length. The number of bends shall not exceed a combined total of 90 degrees. 90-degree bends will not be allowed at diffuser connections.

3.6.18.2 Damper Regulators and Bearings

Lever type with matching end bearing. Regulator set shall include rubber gasket between regulator and duct, spring washer between core and housing, wedge pin, dial indicator and handle. Matching end bearing shall be closed end with rubber gasket.

3.6.18.3 Access Panels

Access panels shall be located at all points where adjustable mechanisms are installed internal to or on the surfaces of the ductwork. Where adjustable mechanisms are concealed by walls or ceilings, access doors shall be installed. Size shall be suitable for convenient servicing.

3.6.18.4 Fire Dampers

Fire dampers shall be installed where required, and shall be of a type approved by the U.L. Laboratories, Inc. and the State of California Fire Marshal. Dampers shall be installed per manufacturer's instructions. Provide access door in duct at each fire damper such that damper is easily accessible.

3.6.18.5 Volume Dampers

- Rectangular ducts greater than 1.5 sq. ft.: Provide factory fabricated opposed blade damper, 16 gauge blades, and brass bearings. Blade width shall not exceed six inches.
- Rectangular ducts 1.5 sq. ft. and less: Provide single leaf dampers as described.
- Round ducts 15" in diameter and less: Provide shop fabricated galvanized sheet metal plate dampers. Plate shall be 18 gauge or shall be two even gauges heavier than duct; minimum thickness 22 gauge. Provide stiffening beads at 1/3 points in dampers lighter than 18 gauge.
- Round ducts 16" and greater: Provide opposed blade damper.
- Round ducts 4” – 24” in diameter above “hard” ceilings: Provide cable operated damper. Cable length to be between 3 and 15 FT long.

3.6.18.6 Flexible Connections

Provide fireproof, insulated, non-porous, flexible connections between fans and ducts or casings and where ducts are of dissimilar metals. For round ducts, securely fasten flexible connections by zinc coated steel clinch-type drawbands. Provide a duct support next to each flex connector to prevent any strain on connection.

3.6.18.7 Condensate Drains and Drain Pans

- Air conditioning cooling coils shall have a condensate drain pipe, type "M" copper, to drain the condensate.
- Fan coils or DX cooling coils located in an attic or furred space shall have a secondary drain pan constructed of 20 gauge galvanized steel sheet metal. This pan shall have a drain line discharging to a conspicuous location. This pan and drain is in addition to the normal condensate drain line from the coil.

3.6.18.8 Motor Starters

Motor starters shall be provided complete with properly sized thermal overload protection and other appurtenances necessary for motor control. Mount starter adjacent to equipment. Maintain minimum of 3' clearance to front of devices. Motor starters shall be NEMA I or III as appropriate, general purpose, weather-resistant, with watertight enclosure where required.

3.6.18.9 Insulation

Insulation of heating and cooling ducts shall conform to requirements of CMC. Insulation shall be installed after the required tests have been applied to the piping and duct systems, and the systems have been inspected and approved.

3.6.18.10 Temperature Controls

Temperature controls shall be provided for zones with similar use, loads and exposure. Thermostats shall be capable of 7 day programming and shall incorporate a minimum 5 degree deadband.

3.6.18.11 Labeling

Labels shall be provided for all equipment and switches. Labels shall be 2" x 1" x 1/8" thick plastic engraving stock beveled on both sides and with two 3/16" diameter holes near the top uppermost tag corners. Labels shall be white with 3/8" high red engraved letters. Labels shall be attached to the equipment with adhesive or screws.

3.6.18.12 Mechanical Systems Balancing

Mechanical systems balancing shall be performed by an independent balancing company certified by Associated Air Balance Council (AABC) or National Environmental Balancing Bureau (NEBB). Testing and balancing shall be performed by a company other than the mechanical system installers/contractor. Upon completion of the balancing operation and prior to final acceptance of the systems, the balancing firm shall submit an Air Side Report certifying to the proper performance of the system for approval by the City.

Air Side Report

The following information shall be included in the Air Side Report:

- Fan speeds.
- Motor current readings and voltage readings.
- Air quantities in CFM at supply, return, exhaust terminals, and outside air intakes, both at design value and actual measured value. Test and adjust each terminal to within +10% of design requirements.
- Air velocities in FPM at supply, return, and exhaust terminals at design value and actual measured value.
- Positive static pressure, negative and total pressures and total air quantities for each fan system.
- Equipment nameplate data.

3.6.19 Electrical and Lighting

Electrical and Lighting systems shall be in conformance with CBC/Title 24 requirements.

Lighting shall meet IES recommended levels for each space and use. All lighting fixtures to be manufactured by a company with a minimum of 10 years' experience. Interior lighting controls (daylighting and occupancy sensors) shall be produced by the same manufacturer as light fixtures. All light fixtures shall be independently tested to verify manufacturer's listed light levels. All exterior light fixtures shall be housed in non-ferrous housings with stainless steel fittings. All exterior light fixtures shall be full cut off. Exterior lighting shall be

provided with dual light levels and controls to allow light levels to be dropped to minimum levels when the facility is not actively occupied.

Power shall be provided as required for the intended use of each space and as required by code. Power outlets controlled by switches shall be identified with permanent labels or color-coded outlets. Three phase power shall be provided in shop area for anticipated service equipment. Power outlets shall be provided for wall mounted display screens.

3.6.20 Telecommunication Systems

Telecommunication system shall be provided as required for the anticipated use of each space including voice and data communications. Each workstation or office shall be provided with a minimum of four data outlets. Data outlets shall also be provided for provision of Wi-Fi access points, printers, security cameras, and the SCADA system. All materials shall be UL Listed and shall be marked as such. If UL has no published standards for a particular item, then other national independent testing standards shall apply and such items shall bear those labels. Where UL has an applicable system listing and label, the entire system shall be so labeled. All modular jacks, patch cords, consolidation point, and patch cords performance shall be verified (not just tested) by a third party to be category 6 component and channel compliant. All data outlets shall be permanently labeled with a printed label identifying the outlet.

Telecommunications cabling shall adhere to the current version of the following standards

ANSI/TIA/EIA - 568-C.0, Generic Telecommunications Cabling for Customer Premises
ANSI/TIA/EIA - 568-C.1, Commercial Building Telecommunications Cabling Standard.
ANSI/TIA/EIA - 568-C.2, Balanced Twisted Pair Cabling Components, Addendum 1 –
ANSI/TIA/EIA - 568-C.3, Optical Fiber Cabling Components
ANSI/TIA/EIA – 569-A, Commercial Building Standard for Telecommunications Pathways and Spaces
ANSI/TIA/EIA – 606-A, Administration Standard for Telecommunications Infrastructure of Commercial Buildings
ANSI/TIA/EIA – 607-A, Commercial Building Grounding and Bonding Requirements for Telecommunications
ANSI/ TIA/EIA – 758, Customer-Owned Outside Plant Telecommunications Cabling Standard
BICSI - TDMM, Building Industries Consulting Services International, Telecommunications Distribution Methods Manual (TDMM)
National Fire Protection Agency (NFPA – 70)
California Electrical Code

3.7 Plantings

Planting shall be provided to enhance the visual appeal of the entrance to the facility and around the public areas of the Operations building and to provide a screening buffer for the neighboring property to the east.

3.7.1 Visual Aesthetic

The project landscaping shall generally serve to enhance the visual corridor of the entrance to the site and provide a screening buffer for the neighboring property to the east. Plants shall be grouped in masses to appeal to the aesthetics as viewed at vehicular speeds. The overall plant palette does not require more than 10 to 15 plant species to convey the aesthetic.

3.7.2 Drought Tolerance

Landscaping shall primarily comprise of heavily drought tolerant species suitable for the coastal exposure. A good target percentage for the landscape palette is 80% drought tolerant low water using plants (based on WUCOLS standards), and 20% moderate water using plant material.

3.7.3 Plant Sizes

As a general rule of thumb, the following guidelines are provided for container sizes:

- Shrub: 1-gallon size minimum. 40% of plant material shall be upsized to a minimum of 5 gallon.
- Trees: 15-gallon size minimum. 50% of plant material shall be upsized to a minimum of 24" box. Trees intended to provide shade, or with slow growing habits shall be considered for upsizing first.
- Ground cover: 1-gallon size minimum. Large spreading groundcovers (5-6 ft on center spacing minimum) shall be 5-gallon size minimum.

3.7.4 Planter Mulch

All landscape areas shall be dressed with a non-combustive, weed free, organic mulch. No eucalyptus material is acceptable. The mulch shall be installed in a 3" minimum layer.

3.7.5 Plant Layout

Plant material shall be designed and located such that larger/taller plant material creates a backdrop for shorter lower growing plant material in the foreground. Accent plant material is encouraged at focal points like street intersections, and entry ways. Plant material shall be spaced at ¾ of anticipated full spread. This will avoid large void spaces between plant material and allow plants to fill in quicker.

3.7.6 Soil Preparation

Soils shall be amended per the requirements of the State or local Model Water Efficient Landscape Ordinance. Soil samples shall be taken and tested for fertility. Soil amendments shall conform to the requirements obtained through this testing. Where soils are non-conducive to plant life, due to heavy thick clay, contaminants or rock, the top 6" of existing soils in planted areas shall be exported off site and topsoil imported. Topsoil shall conform to SSPWC standards for Grade A topsoil.

3.7.7 Plant Establishment

An establishment period of 90 days (minimum) shall be required for initial maintenance and warranty of plant material. Site observation meetings shall be scheduled at 30-day intervals to observe plant material. Repairs shall be provided on an ongoing basis.

3.7.8 Plant Warranty

The installer shall warranty all trees for a minimum of 1 year. All shrubs shall be warrantied for a minimum of 30 days beyond the completion of the establishment period.

3.8 Irrigation

Irrigation System shall comprise of equipment selected from manufacturer's having been in the business a minimum of 15 years and have a good track record of long lasting equipment. Equipment shall be comprised of components designed to perform with high water efficiency.

3.8.1 Irrigation Emission Devices

- The following guidelines are provided for the design/implementation of the irrigation system.
- Large slopes – Low flow rotors or rotary nozzles shall be utilized to keep runoff down. Dripline is discouraged in this application.
- Large landscape areas – Low flow rotors or rotary nozzles shall be utilized. Drip may be utilized if approved by City.
- Small and Linear planters – Low flow rotary nozzles or drip irrigation shall be utilized. Drip may be required when parkway planter sizes are less than 10 ft in width.

3.8.2 Piping

PVC pipe shall be SCH 40 minimum. Do not use pipe sizes less than ¾" for laterals. Mainlines should have a minimum size of 1½".

3.8.3 Remote Control Valves

Utilize brass globe valves intended for dirty water use.

3.8.4 Ball Valves

Bronze or brass, not plastic. Locate along mainline periodically and at crossings to allow for mainline shut off for maintenance.

3.8.5 Valve Boxes

Shall be locking. Purple where dirty water is in use.

3.8.6 Controller

Weather based controller capable of adjusting runtimes based on live input data and historical data. Shall have ports for a master valve, flow sensor, rain sensor/moisture sensor. Shall have 20% spare capacity to allow for future expansion. 2 wire is acceptable.

3.8.7 Flow Sensor

Manufactured by same company as the controller. Shall be able to read high and low flows of the design system.

3.8.8 Master Valve

Brass normally closed valve intended for dirty water use.

3.8.9 Quick Couplers

Locate periodically for maintenance purposes. Dirty water compatible.

3.9 Fences and Gates

Permanent exclusion fencing shall be provided along the eastern border of the WRF site, consisting of a 5-foot concrete wall (3-foot embedment) with a 5-inch lip and a 6 foot tall chain link fence with privacy slats

and 3 strands of barbed wire on the top. The remaining fencing around the WRF site shall be 6 foot tall chain link fence with privacy slats and 3 strands of barbed wire on the top. [PCO 058]

Add 1, 4-foot wide walk gate per Caltrans Standard Detail A85A. Add a sidewalk and steps down to the southern man gate. Include handrail on both sides of staircase. Update fence location. Add a 4-foot wide walk gate with a locking door handle to match the fence height. See Attachment 1. [PCO 73]

~~Wildlife exclusion fencing~~ A concrete barrier wall for wildlife exclusion shall be provided around the Eastern Perimeter of the site from Teresa Road to the plant entrance gate. The remainder of the Eastern Perimeter barrier shall be a HDPE bracket attached to fencing. [PCO 84] [PCO 84.1]

3.10 Space Needs

Drawings define scope.

3.11 Space Needs Identification Forms

Drawings define scope.

3.12 Equipment and Furniture List

Operations Building: Offices

- Computer Workstations – Quantity: 5
- Telephones – Quantity: 0 [PCO 47.1]
- Office Workstation Furniture – Quantity: 5
- Desk Chairs with arms – Quantity: 5
- Guest Chair without arms – Quantity: 5
- Lateral File Cabinet – Quantity: 5
- Bookcase – Quantity: 5

Operations Building: Control Room – Operations Center

- Control Workstations – Quantity: 3
- Computer Workstations – Quantity: 3 [PCO 47.1]
- Telephones – Quantity: 0 [PCO 47.1]
- 50" Diagonal Wall-mounted Monitors – Quantity: 3
- Control Console – Quantity: 3
- Work Station Counters – Quantity: 8
- Desk Chairs with Arms – Quantity: 3
- Desk Chairs without Arms – Quantity: 8

Operations Building: Map Room

- Whiteboards – Quantity: 2
- Layout Tables – Quantity: 4
- Flat Files-Map Cases – Quantity: 0 [PCO 47.1]
- Stools – Quantity: 4 [PCO 47.1]
- Bookshelf – Quantity: 1 [PCO 47.1]

Operations Building: Sample Storage

- Exposed Shelving – Quantity: 1
- 18”x42” Counter
- 1 Horizontal Freezer
- 2 Refrigerators [PCO 47.1]

Operations Building: Training-Break Room

- Computer workstation – Quantity: 1
- Large Monitor – Quantity: 3 [PCO 47.1]
- Whiteboards – Quantity: 2
- Refrigerator – Quantity: 1
- [PCO 47.1]
- [PCO 47.1]
- Tables – Quantity: 5 [PCO 47.1]
- Chairs without arms – Quantity: 20 [PCO 47.1]
- Stovetop hood and microwave combo – Quantity: 1 [PCO 47.1]

Operations Building: Table and Chair Storage

- Chair Storage Dolly – Quantity: tbd
- Table Storage Dolly – Quantity: tbd

Operations Building: Conference Room

- TV-Monitor – Quantity: 1
- Whiteboards – Quantity: 1 [PCO 47.1]
- Conference Table – Quantity: 1
- Conference Chairs with arms – Quantity: 8

Operations Building: Copier-Work Alcove

- [PCO 47.1]

Operations Building: Reception Area / Lobby

- [PCO 47.1]
- Lobby Seating - Visitor Chairs – Quantity: 3

Operations Building: Men’s, Women’s Restrooms and Shower + Locker Room

- No furniture or equipment

Operations Building: On-Call Room

- [PCO 47.1]

Operations Building: Uniform Storage + Wash Room

- 24”x60” Bench and Boot Storage
- 25’ single side clothes hanging racks

- 20’ double side hanging racks [PCO 47.1]

Operations Building: Server Room

- Equipment Racks – Quantity: tbd
- Radio system, alarm, CCTV – Quantity: tbd

Operations Building: Janitor-Mechanical Room

- Exposed Shelving – Quantity: 1

Operations Building: Electrical Room

- No equipment or furniture

Shop Building: Shop and Storage

- City to Relocate Existing City Equipment
- Pallet Racking [PCO 47.1]
- Teletruck [PCO 109]
- [PCO 47.1]

Shop Building: I + C Workshop

- City to Relocate Existing City Equipment
- Lab hood [PCO 47.1]
- [PCO 47.1]

Shop Building: Bathroom

- No furniture or equipment – Quantity:

Shop Building: Lab

- City to Relocate Existing City Equipment
- Central Island
- 2 large sinks [PCO 47.1]
- 2 Refrigerators [PCO 47.1]
- [PCO 47.1]
- City to Relocate Existing City Furniture

Shop Building: Operations

- City to Relocate Existing City Equipment
- Closed Bookcase
- Adjustable Workstation
- TV Monitor [PCO 47.1]
- [PCO 47.1]
- City to Relocate Existing City Furniture

3.13 Landscape Plan

Drawings define scope of landscape areas. Minor landscaping along entrance road shall be included.

SECTION 4 STRUCTURAL CRITERIA

4.1 General

All structural design shall be prepared under the direct supervision of a Structural Engineer licensed by the State of California. Design all structures for a service life of not less than 50 years, in accordance with the most current applicable codes and standards.

Structural Features/Scope are summarized in the table below and detailed further within Section 4. The summary table shall govern in event of a disagreement with content in Section 4.

Key Overall Structural Features

- Foundations for various Process and General (Administration, Operation, and Maintenance) Facilities
- Buildings for the Operations Facility, Maintenance Facility, and RO/UV Building
- Various canopies for parking areas, outdoor process equipment, and general storage
- Miscellaneous concrete yard structures (e.g. manholes, vaults, etc.)
- Tanks including the large volume Product Water Tank

4.2 Load and Deflection

Item	Parameter	Criteria	Notes
1	Loads	All loads to structures and components shall be developed with the latest version of the ASCE 7 referenced by the CBC	
2	Live Loads	• Conform to ASCE-7 with traffic loads per AASHTO. • Use minimum live loads for structures that will allow equipment to be moved to other locations or additional equipment to be added. • Floor live loads in equipment rooms, pump rooms, electrical rooms and areas where equipment may be moved to various locations shall be not less than those given in ASCE-7 for light manufacturing: 150 pounds per square foot uniform load and 2,000 pound concentrated load. • Where the loads of specific equipment give higher design	

		forces and stress for a specific area, the higher loading shall be used. No live load reduction may be used. • For heavy equipment greater than five tons, floor live loads shall be designed for the greater of 250 pounds per square foot uniform load or the load of the specific equipment.	
3	Wind Loads	ASCE-7 wind load design forces and wind load detailing requirements shall apply for all buildings, equipment anchorage, and hydraulic or water-holding structures.	
4	Seismic Loads	• ASCE 7 seismic load design forces and seismic load detailing requirements shall apply for all buildings, equipment anchorage, and hydraulic or water-holding structures • All structures and components shall be designed with the values below: o Latitude = 35.3707 o Longitude = -120.8217 o Site Class = C o S_S = 1.135 o S_1 = 0.421 o Importance Factor = 1.25 o Component Importance = 1.0 to 1.5	Refer to Geotechnical Baseline Report
5	Deflection	Serviceability design shall ensure against deflections causing adverse functional or aesthetic effects over the life of the plant. The live load and total load deflections criteria given in the CBC for general loading combination and specific to the various design material (concrete, steel, CMU, timber, etc.) shall be the minimum for buildings, building-like structures, and for structural and material types not specifically covered elsewhere.	

4.3 Building Structure Types

All buildings and canopies may be either pre-engineered metal buildings, or custom designed.

Item	Parameter	Criteria	Notes
1	Operations Building	• Steel-framed with no internal columns • Provide a CMU wainscot exterior, to a height of 4 feet from top of slab • Concrete slab on grade shall be 4 inches, minimum • If a Pre-Engineered Metal Building system is used, it shall be designed for the following dead loads: o Self-weight o Weight of steel framing and deck o Collateral Load made up of: o 5-PSF partition wall load o mechanical, electrical, and plumbing load o ceiling and ceiling support system load o insulation load o 4 pounds per square foot solar panels o 5 pounds per square foot additional load	
2	Maintenance Building	• Steel-framed with no internal columns. CMU wainscot exterior, to a height of 4 feet from top of slab	
3	Advanced Treatment Building	Steel framing on a concrete slab on grade. Structure shall be one story.	
4	Miscellaneous Covered Structures	• Steel-framed and consistent with architectural features and structural elements of other facilities on the site • Where adjacent to other structures, covered structures shall be separated by 6 inches or seismic separation required by the ASCE 7, whichever is greater	
5	Miscellaneous Building Structures	Constructed in a style consistent with architectural features and structural elements of other facilities on the site	Unless otherwise specified, all other structures shall be consistent with performance criteria

			stated for Operations Building

4.4 Tanks and Basins

Item	Parameter	Criteria	Notes
1	Material	• Glass-lined bolted steel tank for Product Water tank. • Process tanks and facilities shall be of reinforced concrete, FRP, HDPE, or stainless steel. • Process chemical tanks may be of FRP or similar materials.	
2	Tank Wall Design	• The walls of water-containing structures, including tanks and basins, shall be designed for the following conditions: o Tank or basin at full liquid level without soil backfill. o Empty tank or basin with soil backfill and maximum ground water. o Basin or tank cells in any combination of empty and full. o Increased soil backfill pressures and liquid pressures due to seismic conditions. o Foundation subdrains in the two deep, water-containing structures to mitigate changes in soil lateral earth pressure [PCO 057] o Seismic impulsive and convective loading under operating conditions. o Operational level shall include maximum flooded condition unless passive methods are provided to prevent flooding. Passive methods include overflow weirs, upstream or downstream hydraulic controls not dependent on pumps, monitors, electronic controlled valves, or operators. o If passive level controls are present, then the	

		maximum operational level is defined as the liquid elevation when those controls are in effect.	
3	Backfilling	Water-containing structures shall not be backfilled until the basin passes the watertightness testing	
4	Uplift Loads	• Tanks and basins shall be designed for uplift based on the following safety factors and groundwater conditions: o Maximum groundwater levels expected during a 100-year storm and/or 199-year flood events in the structure area, as a minimum, with basins at normal minimum operating levels and a minimum safety factor of 1.1. Groundwater elevation: 10 feet below existing grade. o Groundwater at normal levels with basins empty and a minimum safety factor of 1.5. o In all cases side friction shall not be considered as resisting uplift.	• These conditions only apply to the uplift calculations. • Maximum ground water level is the level that can be obtained adjacent to the structure being evaluated. Drain systems, external to the structure, may be provided to reduce the maximum ground water level. The reduced level shall only be used in uplift calculation when the drain system is entirely passive, i.e. relying only on gravity. The reduced ground water levels from drain systems that rely on pumping, monitoring, or operator intervention shall not be substituted for the maximum ground water level obtainable if components of such a drains system did not operate.

4.5 Non-Building and Miscellaneous Structural Elements

Item	Parameter	Criteria	Notes
1	Headworks and Equalization Basin	The Headworks shall be concrete or packaged stainless steel units.	
2	Site Retaining Walls	• Walls shall be at least 8-inch thick cast-in-place concrete construction, or segmental block for walls 3 feet and shorter (Versa-Lok or similar quality) • Where grade behind wall exceeds 1:1 slope, retaining wall shall be designed and detailed for 1.5 feet in additional retained height, in anticipation of erosion that will occur over the service life of the site	Reference Geotechnical Baseline Report for preliminary soils design values. DB may find it necessary to update and expand on current Geotechnical Baseline Report for values that fit each specific retained condition.
3	Anchorage for Equipment	Anchorage shall be designed in accordance with ASCE 7, Chapters 13 and 15. Slab and housekeeping pad thicknesses must be coordinated with anchorage depth during design of the structure. All supporting concrete edges must be at least 8 inches from any anchor location.	
4	Equipment Pads	• All equipment and associated panels and cabinets shall be installed on reinforced concrete equipment pads, a minimum of 6 inches above grade, or 3.5 inches above adjacent floor or slab • All pads shall extend a minimum three inches outside the equipment, panels or cabinets, while also meeting the anchor edge distance specified above	
5	Vehicle and Equipment Wash Rack	• Concrete slab on grade, with a CMU wall on three sides with a grease and sand sepearator. [PCO 106] • Slab on grade shall be 8 inches thick minimum and capable of withstanding maintenance vehicle and equipment loads. • CMU wall shall be capable of withstanding 2,000-pound point load at 2 feet from top of slab at any location along the wall	

4.6 Foundations

Item	Parameter	Criteria	Notes
1	Design	• Foundations shall be designed in accordance with the Geotechnical Baseline Report • Structures shall be located on the site such that foundations for each structure are of the same type • If it is necessary to locate foundation partially in rock, the design of the foundation shall be such that the expected settlement of the portion founded in soil is equivalent to the portion founded in rock	The DB may need to update and expand on current Geotechnical Baseline Report for values that fit each specific foundation condition

4.7 Structural Materials

Item	Parameter	Criteria	Notes
1	Concrete Design	Concrete structures, including tanks and buildings, shall be designed and constructed in accordance with all applicable codes. The concrete mix design shall meet the requirements of ACI 318 and ACI 350. Ground water shall be sampled and tested for salinity and sulfate levels. The concrete mix design shall be adjusted to provide appropriate sulfate resistance per ACI 318 and ACI 350.	
2	Structural Steel	Structural steel shall be designed, fabricated and erected according to the latest applicable CBC Chapter 22 as modified by ESP 550.1.	
3	Connections	• Structural connections shall be shop welded and field bolted. Welds shall be designed and executed in accordance to ANSI/AWS D1.1 Structural Welding Code — Steel. Welding procedures shall be qualified in accordance to ANSI/AWS DI. I Section 5. Welders, Welding Operators and Tack Welders shall be currently qualified in accordance to ANSI/AWS D1.1 Section 5. Welders' certifications should be made available to City. Welding inspectors shall have current certification as an AWS Certified Welding Inspector (CWI) in accordance	

		with AWS QCI Standard and Guide for Qualification and Certification of Welding Inspectors. • Bolted connections for steel buildings, building-like structures and platforms that enclose or support process equipment, shall be designed as snug-tightened connections with the threads included in the shear plane. The actual bolts provided for the connection shall have the threads excluded from the shear plane. Bolted connections shall conform to AISC Specifications for Structural Joints Using ASTM A325 or A490 Bolts.	
4	Metal Roof Deck	Design and fabrication of metal roof deck shall be in accordance with the latest specifications of the Steel Deck Institute. Steel used in the fabrication of deck units shall conform to the requirements of the AISI Light Gage Cold-Formed Steel Design Manual.	
5	Miscellaneous Metals	• Miscellaneous metals shall include such items as gratings, metal floor plates, railings and toe plates, loose lintels and miscellaneous framing and ladders. Materials of construction shall be selected to provide maximum service life for the expected environmental conditions, including exposure to corrosive atmospheres and marine conditions. Any metal item that is submerged shall be 316 stainless steel unless the corrosivity of the environment requires different. Any metal item located in a corrosive atmosphere shall be 316 stainless steel, unless noted otherwise or if aluminum or another material is suitable and complies with the reference standards. No dissimilar metal items what would result in corrosion if in contact shall be used. • Aluminum shall be insulated from direct contact with concrete. • Miscellaneous metal shall be fabricated in accordance with the most recent applicable CBC, OSHA, or ASTM standards. All metal fabrications exposed in the finished construction,	

		both interior and exterior, whether painted or not, shall be hot-dip galvanized (heavy duty type coating) except in aluminum only for railings, toe plates and stairways. Galvanizing of miscellaneous metal after fabrication shall be in conformance with ASTM A123 and A153. • Cadmium plating of miscellaneous metals shall be in accordance with ASTM A165, Type TS. • All anchor bolts shall be stainless steel Type 316. • Cages, ladders, and fall protection devices shall conform to applicable OSHA regulations.	
6	Aggregate	Structural concrete materials shall have certification of compliance for meeting ASTM specifications and test reports certifying that no material contains asbestos and that all aggregates are non-reactive to alkalinity. All certifications, submittals, and reports shall be current within three months of use and shall be identifiable to the materials supplied for both fine and coarse aggregate. Provide reports for aggregate tests performed specifically for this project, for each source of aggregate including chemical tests (ASTM 289) and accelerated mortar bar expansion tests (ASTM C1260).	
7	Cement	• The Geotechnical Baseline Report identified a potential for soil corrosivity towards concrete. DB shall either perform additional soils testing, to verify that corrosive soils do not exist, or shall furnish corrosion resistant concrete using Type II/V cement. • Structural Concrete Class A Concrete f'c = 4000 psi • Shall contain a mineral admixture fly ash Class F not to exceed or replace more than 15 percent of the cement material required without the mineral admixture. Mineral admixture shall conform to ASTM A618.	

SECTION 5 CIVIL CRITERIA

5.1 General

The following section includes the performance criteria associated with site-civil elements of the WRF.

Civil Features/Scope are summarized in the table below and detailed further within Section 5. The summary table shall govern in event of a disagreement with content in Section 5.

Key Overall Civil Features

- Earthwork required to develop a graded platform for the new Water Reclamation Facility
- Access roads within the WRF plant site
- Stormwater management within the WRF plant site
- Yard piping (both process and utility) within the WRF plant site
- Chemical distribution ductbank
- Site electrical facilities including power distribution and site lighting (reference Electrical Proposal Form for information)

Equipment – Sanitary Lift Station

- 1 lift station with duplex submersible pump configuration
- Pumps appropriate for raw wastewater application
- Assumed flowrate of up to 300 gpm; assumed rated head 60-ft
- Controls based on float switch located within manhole with alarm signal sent to plant SCADA/PLC system.
- Manufacturer: DXP, Xylem, Flygt, or similar.

5.2 Site Improvements

Item	Parameter	Criteria	Notes
1	Finish Surface Type	• Concrete: sidewalks, equipment pads, foundations, site entrance, truck stopping and parking areas • Asphalt: paved roads • Crushed rock: unpaved areas • Native material: unimproved areas	All improved areas within the site that are not concrete, asphalt, or landscaping shall be crushed rock
2	Backfill and Compaction	Refer to Geotechnical Baseline Report	See Appendix J: Geotechnical Baseline Report for additional geotechnical information
3	Existing Finished Surface	Native vegetation	Existing site has not been developed

4	Site Setbacks	Building and process areas shall be located to comply with San Luis Obispo County and the City of Morro Bay Building standards	Maintain setback for creeks/drainages
5	Bollards	where necessary for equipment maintenance bollards shall be removeable	
6	Perimeter Fence	The WRF perimeter shall be enclosed with a 6-foot tall galvanized chain-link fence with privacy slats and 3 strands of barbed wire on the top. The eastern edge of the site shall also have the concrete exclusion barrier underneath the chain link fence. [PCO 058] The fence around the west and east sides of the Operations Building shall be 6' chain-link without barbed wire. The parcel perimeter will have a barbed wire fence. [PCO 041]	Coordinate with Section 3.9
7	Survey and Utility Information	The City will provide the survey files and available utility information for informational purposes. The DB is responsible for validating the information provided by the City. The DB is responsible for obtaining additional survey and utility information.	

5.3 Site Layout

Item	Parameter	Criteria	Notes
1	Building/Facility Locations	• Proximity of buildings to Highway 1, nearest to furthest: • Operations Building • Storm Drainage Facilities • Equipment/Vehicle Storage • Material Laydown Areas • Maintenance Building • Treatment/Process Facilities	• Reduce the visibility of the storage and process areas from the Highway. • Locate headworks, EQ basins, and other processes subject to odor as far from the Operations Building as feasible.
2	Future 800 kW solar Facility	The site planning must include space for a future 800 kW solar facility	Provisions for a future solar facility are to be included in the site layout to facilitate future constructability and access

3	Site Vehicle Circulation	The WRF facility shall be designed to allow truck and service vehicle traffic to flow smoothly without creating areas of congestion and dead-ends The WRF facility shall be designed to minimize need to back up chemical delivery and biosolids hauling trucks.	
4	Fire Equipment Access	The WRF facility must be designed to allow full access for emergency responder vehicles and equipment. Emergency responder vehicles shall be able to drive continuously throughout the site without any reverse movements.	

5.4 Site Access Road

Item	Parameter	Criteria	Notes
1	Site Access Road Design	Access road shall provide vehicular access to the WRF site from the Highway 1 on and off ramps. [PCO 066] The City will be responsible for permitting, including potential Cal Trans permit for widening of offramp area, with drawings furnished by the DB team.	
2	Site Access Road Location	The access road shall be generally located per Figure 5-1	

Figure 5-1: WRF Site Access Road – NOT USED – See 90% Drawings [PCO 066]

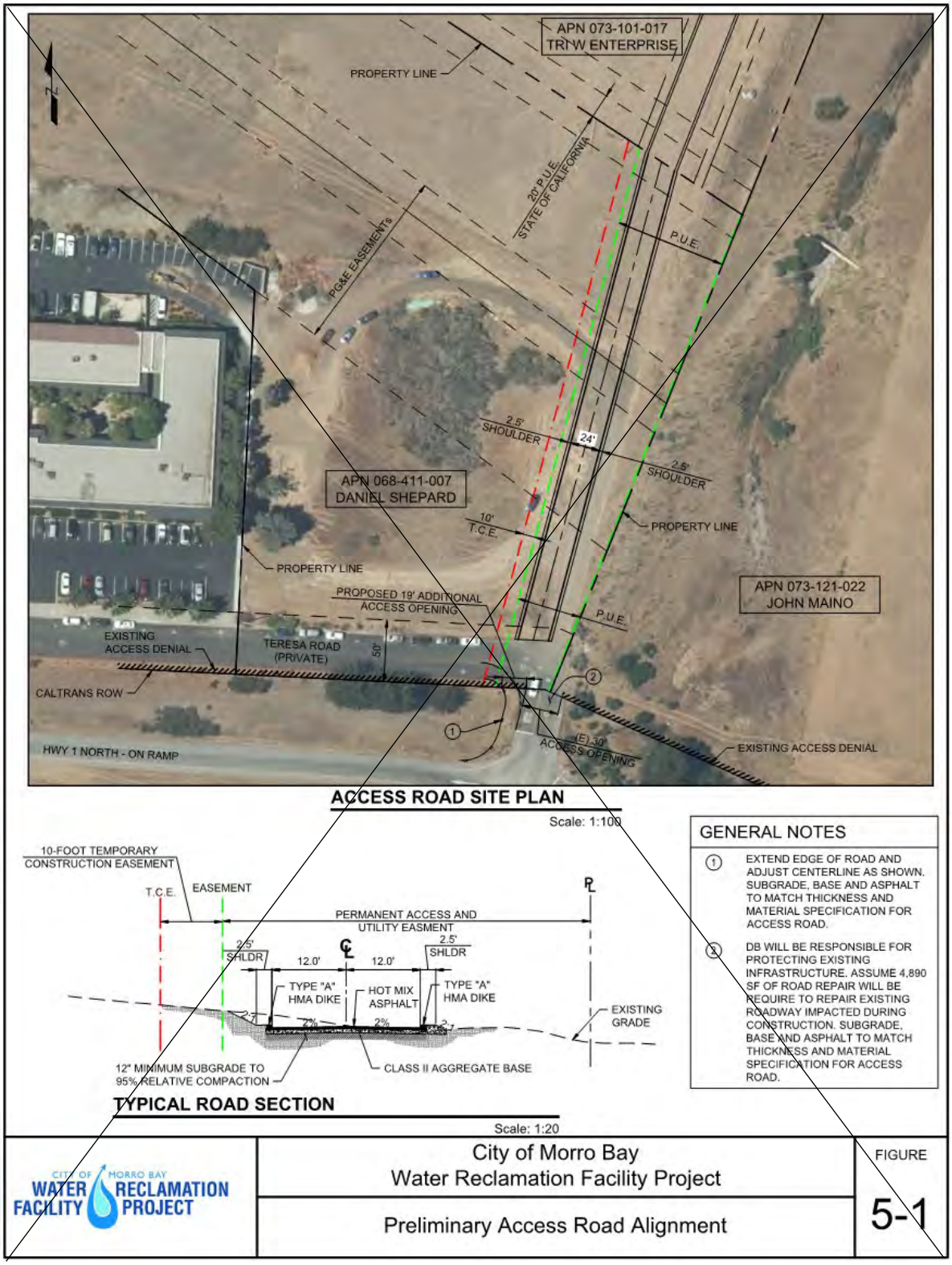

[PCO 066]

5.5 Offsite Pipeline Coordination

Item	Parameter	Criteria	Notes
1	Connection point	• Connect to the influent 12" and 16" force mains, [PCO 022] recycled water pipeline, dedicated City fiber optic line, and effluent pipe, at approximately 20 feet north of the access and utility easement boundary at Highway 1 ROW. • The exact location and connection details within the access and utility easement to the WRF site shall be determined as part of the access road improvements and provided to the City by the 60% design submittal • DB to connect to City potable water main offsite and extend throughout WRF property. Connection point is to be extended further offsite to connect to existing line in Teresa Road [PCO 117] • Refer to Utility Coordination Plan (Figure 5-2)	
2	Stubs	Any temporary or permanent stubs should be capped, blind-flanged, or protected in a manner to prevent foreign materials from entering the pipeline.	

5.6 Potable Water

Provide on-site water distribution facilities for domestic water services at the WRF. Provide connection(s) to City water supply as shown on Figure 5-1. City will provide water meter and DB will install service and connect to City water main. System shall be completely separated and isolated from the fire water and process water systems.

Item	Parameter	Criteria	Notes
1	Design Approach	• See drawings for system configuration approach. • Potable water system design shall be based on a connection to City's water main. DB to extend water line from City water main offsite as shown on Figure 5-2, then	

		throughout WRF property as needed.	
2	Potable Water Uses	• Operations Building, Maintenance Building, and Fire Water System • Emergency eyewash, fire, personal hygiene, kitchen, and laboratory	DB to confirm final service uses
3	Separation of Buried Piping	Horizontal and vertical separation between potable water pipelines and non-potable water pipelines shall meet the requirements of the SWRCB Division of Drinking Water's (formerly the Department of Health Services) Criteria for the Separation of Water Mains and Non-Potable Pipelines guidance memo	
4	Backflow Prevention	• Provide appropriate backflow prevention systems for the potable water supply to site • Where potable water is used for landscape irrigation or process usage, provide a reduced pressure principle backflow assembly system complete with test cock and isolation valves	Backflow devices must be testable.
5	Air Release/Vacuum Valves and Blow Offs	• Provide air and vacuum relief valves at high points on pressure pipes • Provide drains or blow-offs at low points	Consider location of actual points of discharge/ disposal when placing drains or blow-offs.
6	Piping Layout	• Lay piping in utility corridors that are at least 10' wide and accessible for service or repairs. Include overhead and peripheral clearance to allow for work by excavating and lifting equipment such as backhoes. • Where feasible, align utility corridors along roadways or other corridors to avoid conflicts and future construction areas. • Utility corridors shall be placed outside the mature dripline of trees. • High and low points in the fire water system shall be minimized to reduce the need for ARVs and prevent sediment buildup.	

7	Pipe Sizing	Prepare and provide pipe capacity hydraulic calculations to demonstrate the proposed pipe sizes are adequate	Include 20 percent spare capacity
8	Water Demand	• The water demand shall be determined based on the applicable building and fire codes • The potable water system shall be able to supply the determined water demands at each point of connection while meeting the minimum and maximum pressure requirements	
9	Water Meter	• Potable water service connection shall be metered and independent of the fire water service connection	

Figure 5-2: Utility Coordination Plan

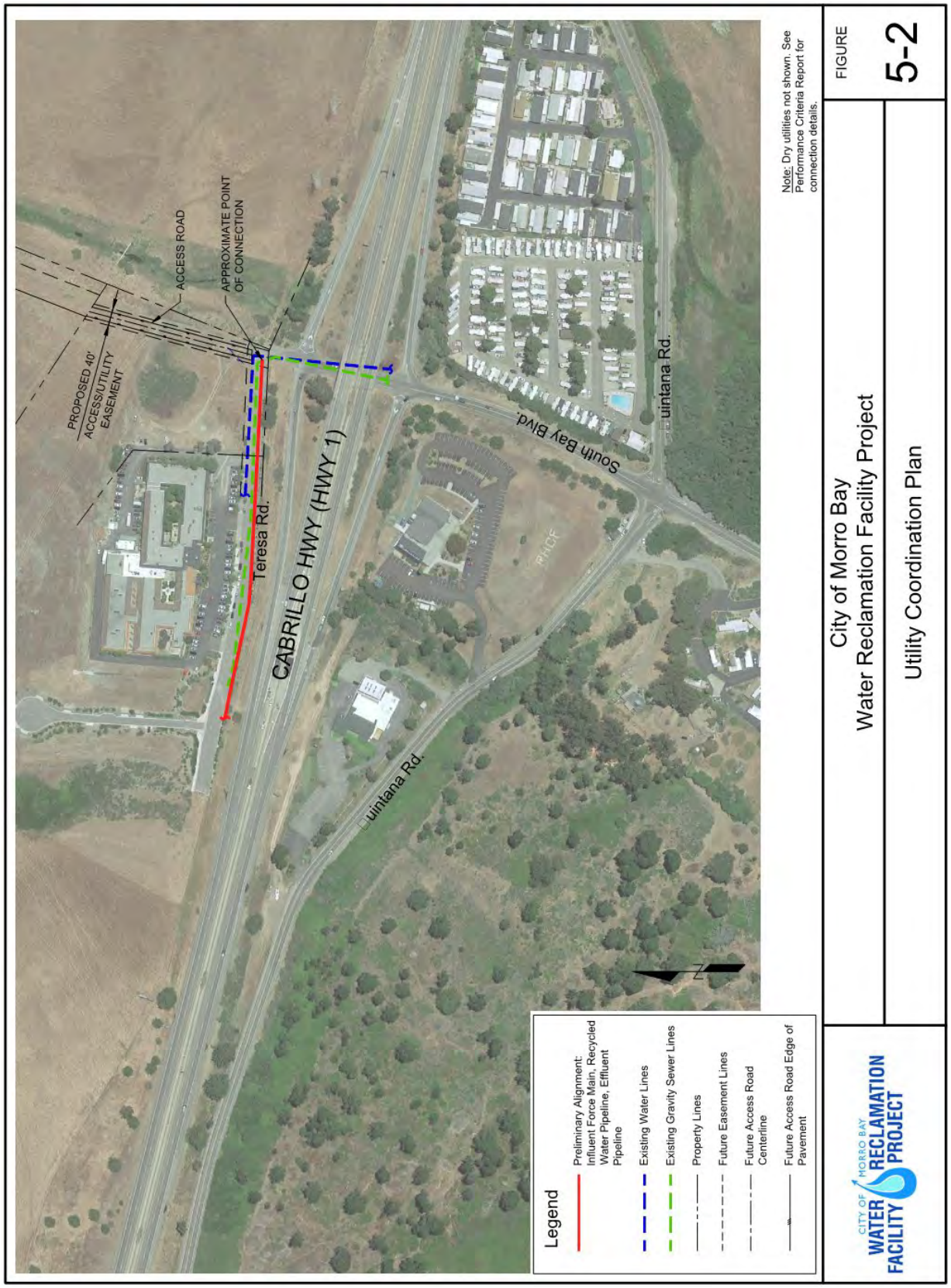

5.7 Fire Protection

Provide on-site water distribution facilities for fire water services at the WRF. Fire water system shall include distribution piping, fire sprinklers (where required by code), and fire department connections, capable of meeting the requirements of Cal Fire and the City Morro Bay Fire Protection requirements for isolated structures that are not served by a water utility.

Item	Parameter	Criteria	Notes
1	Code	Comply with National Fire Protection Association (NFPA) Standard 13 for a "light hazard" and local fire codes	
2	Source Water	Fire water shall be provided from the potable water supply system	
3	Fire Hydrant Locations	• Submit fire hydrant locations for review and approval by City and local Fire Department. • Fire hydrants shall be placed throughout the WRF Site at a distance of no more than three hundred (300) feet. • Place fire hydrants near access roads with fire truck access and where they are readily visible. Mark with reflective blue dot street markers located in the center of the access road adjacent to the fire hydrant. • Provide bollards for fire hydrants that are vulnerable to vehicular damage.	
4	Design Flow and Pressure	• Fire water system shall be capable of supplying 1500 gpm @ 20 psi (minimum) to any point within the fire water system for a period of 2 hours. •	
5	Pipe Velocity	Velocities in pipes shall not exceed 12 feet per second during a fire flow scenario	
6	System Layout	High and low points in the fire water system shall be minimized to reduce the need for ARVs and prevent sediment buildup	
7	Fire Alarm	• Design of the system shall be coordinated with the fire detection/alarm system, see	

		Section 8.8 [5/29/19 Fire Marshal Meeting Decision] • The fire alarm shall simultaneously contact the fire department and annunciate in the operations control room when any alarm is activated	
8	Fire Protection for Electrical Equipment	See Section 3.6 for fire protection criteria for electrical, computer, and communication areas	

5.8 Grading and Drainage

Provide grading improvements and a stormwater collection system consisting of gutters, swales, storm drain piping, and catch basins that collect stormwater runoff from the improved WRF Site and discharge into a detention basin. For the control of stormwater discharge from the project site the DB shall meet the requirements of the State Water Resources Control Board's Water Quality Order 97-03-DWQ, NPDES General Permit No. CAS000001 Waste Discharge Requirements for Discharges of Stormwater Associated with Industrial Activities Excluding Construction activities.

Item	Parameter	Criteria	Notes
1	Code Requirements	• Grading activities shall be in compliance with: • San Luis Obispo County Code, Title 22 – Land Use Ordinance, Article 5 – Site Development Standards, Chapter 22.52 – Grading and Drainage • Provisions of the latest edition of the Uniform Building Code Appendix Chapter 33 • Latest edition of the California Building Code.	Any conflict with geotechnical baseline report shall be provided in a written report and presented to the City for consideration. Geotechnical Engineer Transfer of Responsibility Form will be required for any deviations from the GBR.
2	Design Requirements	Grading design shall meet the requirements of the City of Morro Bay Building Permit Application and Minimum Building Permit Submittal Requirements	Grading permits will be processed by the City
3	Design Approach	• Grading plan shall direct runoff away from walkways, buildings, cut and fill slopes, and yard activities • Slopes of unpaved areas shall not exceed 2:1 (horizontal to vertical)	
4	Gutters	Minimize use of cross gutters or ribbon gutters.	Adding catch basins and laterals shall be used in lieu of cross

			gutters, unless an unmovable obstruction prevents the use of subsurface drainage facilities
5	Site Access Road Grades	Longitudinal grades along roadways shall generally not exceed 5%, and shall be designed to be as uniform as possible to minimize grade breaks	
6	Accessibility Requirements	All building entrances for the Operations Building shall be universally accessible	See Section 3
7	Finished Grade	• Finished grades around structures, slabs, and buildings shall be at least 6-inches below floor or slab elevation • Grading shall be performed to accommodate process areas to maintain drainage away from all structures • Water from treatment process areas should be routed to the WRF headworks • The site shall be graded such that all facilities and accessible walkways and roadways are not inundated by a 100-year rainfall event	
8	Drainage Piping	Drainage piping shall be at least 6-inch nominal size for connections to roof downspouts and 12-inch or larger for main collection lines	
9	Culverts	Provide culverts where collected drainage must cross walkways	
10	Inlet Structures	• Design inlet structures where it will not hinder facility operation • Provide a design to eliminate soil or debris from entering storm drain system for large areas • Drain inlet openings shall be a minimum 2 feet in length	
11	Storm Drain and Catch Basin Laterals	Storm drains and catch basin laterals shall be a minimum of 12-inches diameter	
12	Detention Basins	• Provide a detention basin capable of retaining all on-site runoff	

		• Detention basin shall also serve as the emergency overflow pond storage for untreated wastewater, and provide the City the ability to evacuate the entire pond by pumping stormwater or untreated wastewater back into the headworks	
13	Hydrologic Analysis Criteria	• Stormwater pipes and drain inlets shall be capable of collecting and conveying a ten-year, twenty-four-hour event without causing nuisance flooding or surcharging of any pipe • The stormwater system shall be capable of conveying a 100-year,24-hour rainfall event without flooding any facility or building • Use rainfall intensity data from the San Luis Obispo County Department of Public Works & Transportation Improvement Standards • Stormwater detention requirements shall comply with City and County development standards	

5.9 Pavement/Roadways

Provide asphalt roadways and concrete pavement to provide vehicular access and circulation throughout the WRF Project site.

Item	Parameter	Criteria	Notes
1	Type	• Concrete pavement may be used in lieu of asphalt pavement • Use concrete paving where truck parking, loading, washdown, or unloading is anticipated and where asphalt paving is incompatible with the materials handling requirements for the area	
2	Pedestrian Walkways	• Construct pedestrian walkways between structures and buildings of concrete with a minimum width of 4 feet and minimum thickness of 4 inches • All pedestrian paving shall be designed to accommodate service	

		and maintenance vehicles up to twenty-two thousand (22,000) pounds	
3	Access to Process Areas	• Extend pavement to all process areas to provide for maintenance access by forklift and maintenance vehicles • Design all hauling access, including but not limited to sludge and screenings, and chemical delivery access to minimize reverse and back and forth movements by vehicles.	
4	Equipment Areas Not Abutted by AC Paving	• Provide 3" thick layer of ¾" crushed rock compacted to 85% relative compaction conforming to Caltrans standards in and around these areas. • Unless specified otherwise, provide minimum 4-foot gravel apron adjacent to concrete areas. Native vegetation shall not abut concrete areas.	
5	Road Width	• Use a minimum width of 24 feet for two-way traffic • Use a minimum width of 14 feet for single lane roads	Include provisions for a turn-around at dead ends
6	Curb Turning Radius	• Site access roads shall accommodate the minimum turning paths for AASHTO Intermediate Semitrailer vehicles for facilities requiring semitrailer access • All other site access roads shall accommodate the minimum turning paths for AASHTO Single-Unit Trucks • Fire access roads shall accommodate minimum turning paths for fire trucks	
7	Fire Truck Access	• Design buildings to be accessible to fire department apparatus by roads with a minimum unobstructed width of 20 feet, and vertical clearance of 15 feet. • Roadway design criteria and layout shall be approved by local Fire Department	To be defined during Planning Permit application

8	Signs and Marking	Provide directional and traffic signs and markings for all roads and direct traffic to key buildings	
9	Design Approach	• Design pavements for a 50-year design life • R values for subgrade soils under pavement shall be determined by a State of California Registered Geotechnical Engineer • All paving shall be uniform vehicular quality paving, constructed with appropriate subgrade preparation, subbase, and base to handle all anticipated traffic demands for loading, speed, turning, stopping and starting with no rutting or buckling • All paving designs shall be based on a Traffic Index (TI) calculation determined in accordance with Caltrans Highway Design Manual (2012) • Design access roads with a maximum traffic index of 7.0	Coordinate with Geotechnical Baseline Report
10	Curb and Gutter	Portland cement concrete curb and gutter meeting City of Morro Bay standards shall be provided on established roadways and parking areas	

5.10 Construction Dust Control and SWPPP Stormwater Management

5.10.1 Dust Control

Prepare, obtain approval and implement all the requirements of the latest Fugitive Dust Control Plan (FDCP) in accordance with the San Luis Obispo County Air Pollution Control District Regulations. Also, the DB shall prepare, obtain approval, and implement all of the requirements of the latest State National Pollutant Discharge Elimination System (NPDES) General Permit for Stormwater Discharges Associated with Construction and Land Disturbance Activities Order No. 2009-0009-DWQ and industry standards according to the State Water Quality Control Board (SWQCB).

Item	Parameter	Criteria	Notes
1	Fugitive Dust Control Plan	• Prepared using latest APCD regulations. • DB must obtain APCD Approval • After APCD approval of FDCP amend as required	Public requests to review the approved FDCP shall go to the City's Representative

		• Supply approval and amendments to City, DB general office and in job site construction office • Approved copies and amendments shall be available for US EPA	
2	Air Pollution Control District Rules	DB shall be familiar with APCD requirements and maintain a copy at the Construction Sites	
3	Earthmoving Activity	• DB must notify the City 48-hours in advance of activity • Keep daily record of dust control measures every day earthmoving is conducted	

5.10.2 Stormwater Management During Construction

Comply with all of the requirements of the latest NPDES General Permit for Stormwater Discharges Associated with Construction and Land Disturbance Activities Order No. 2009-0009-DWQ according to SWQCB and standard industry practice. This includes, but is not limited to, preparing plans and application, maps as well as all necessary reporting on the SWQCB's Stormwater Multiple Application and Report Tracking System (SMARTS System).

Item	Parameter	Criteria	Notes
1	Stormwater Pollution Prevention Plan (SWPPP)	• DB must have a Certified Qualified Stormwater Pollution Prevention Plan (SWPPP) Developer (QSD) prepare a SWPPP • DB must submit SWPPP to City's Construction Manager for Approval • DB to submit NOI and necessary documents in SWQCB's SMARTS system for approval by LRP • DB shall implement SWPPP and start Construction activity only after written approval from SWQCB • Supply SWPPP approval and amendments to City, DB general office and in job site construction office	Must comply with latest State NPDES General Permit for Stormwater Discharges Associated with Construction and Land Disturbance Activities Order No. 2009-0009-DWQ
2	SWPPP Implementation	• DB shall implement SWPPP and start Construction activity only after written approval from SWQCB • During project DB shall have a Quality SWPPP Practitioner	

		(QSP)conduct audits, inspections, testing, and prepare reports • QSP shall coordinate with the QSD any updates • The SWPPP shall be made available upon request of a representative of the Flood Control District, Regional Water Quality Control Board, State Water Resources Control Board or U. S. Environmental Protection Agency. Requests by the public shall be directed to the Owner's representative	

Notice of violation and/or fines for any non-compliance will be the responsibility of the DB.

5.11 Facility Stormwater Management Post-Construction Requirements

Stormwater management for the WRF shall meet the requirements of the City of Morro Bay Stormwater Management Guidance Manual for Low Impact Development & Post-Construction Requirements, Main Manual (Dated March 6, 2014 and updated July 1, 2017).

5.12 Noise Control

Incorporate noise reduction measures into the project design and construction. Retain an acoustical engineer to measure or calculate post-project operational noise levels at the nearest sensitive receptor based upon the final project design as implemented. If the project results in noise levels exceeding the City of Morro Bay or San Luis Obispo County Noise Ordinance thresholds, the DB shall develop additional sound-attenuation measures which may include additional enclosures for noise generating equipment to ensure that noise levels at nearby sensitive receptors are reduced to the acceptable noise levels as identified in the County thresholds for noise generators.

Item	Parameter	Criteria	Notes
1	General Requirements	• Sound pressure level guidelines are provided by the Code of Federal Regulations Title 29, Part 1910.95 (29 CFR 1910.95) and enforced by OSHA. • These guidelines provide acceptable sound pressure levels for different frequencies and durations. Comply with City of Morro Bay Noise Ordinance regulations regarding community impacts and San Luis Obispo County Noise regulations.	
2	Construction Methods and Equipment	• Utilize construction methods or equipment that will meet local	

		ordinances for the maximum decibel rating at the property line • All construction vehicles and fixed or mobile equipment shall be equipped with properly operating and maintained mufflers • Schedule construction such that the minimum number equipment would be operating at the same time	
3	Portable Noise Barriers	If equipment used can cause hearing damage, portable noise barriers shall be installed to reduce noise levels below hearing damage thresholds	
4	Hearing Protection to Construction Staff	Provide all employees that will be exposed to noise levels greater than 75 dB over an extended period with adequate hearing protection devices to mitigate hearing damage	
5	Staging Areas	Locate vehicle staging areas and stockpiling as far as is practicable from the existing buildings along Teresa Road	
6	Noise Control Design	• Noise control shall be accomplished by a combination of isolating mechanical equipment in mechanical rooms if necessary and properly selecting equipment to meet noise criteria requirements for all equipment and components. • Blower and compressor equipment associated with the MBR system shall be located within a dedicated mechanical room or in sound enclosures to mitigate noise levels.	
7	Sound Attenuation	Exterior mechanical equipment such as air cooled condensing units shall be provided with sound attenuating features (i.e. compressor blankets). The sound power levels from mechanical equipment shall meet minimum requirements.	
8	Construction Hours	Construction shall be limited to between the hours of 07:00 AM and 04:00 PM to reduce construction generated noise.	Exceptions may be requested in writing from the City for work requiring special accommodations. See

			Appendix M for limitations to mitigate noise impacts for hours outside of those listed.

SECTION 6 GEOTECHNICAL CRITERIA

A Preliminary Geotechnical Baseline Report was performed for the Project site to identify geotechnical and geologic conditions and establish design performance criteria for the new plant. The proposed design is inclusive of the recommendations of this report.

A Geotechnical Consultant shall perform a design-level geotechnical site investigation based on the conceptual site layout. It is expected that the investigation will include the following elements:

- Review of available geotechnical information developed for the site, including the results of previous field investigations
- Review of available regional geologic and seismological information in the vicinity of the site
- Perform additional subsurface borings, test pits and geophysical investigations as needed to characterize the site and to permit the development of design recommendations for the new treatment plant

The Geotechnical Consultant shall produce a Geotechnical Design Report that includes the following:

- Description of services performed
- Site conditions
- Subsurface conditions
- Groundwater conditions
- Discussion of regional geology and seismicity
- Natural hazards evaluation
- Liquefaction potential analysis
- Recommendations for seismic design parameters
- Corrosive soils evaluation
- Site preparation and earthwork recommendations, including fills, embankments and cut slopes
- Recommendations for reuse of excavated materials
- Recommendations for imported fill material
- A discussion of foundation type alternatives
- Foundation design recommendations, including performance (settlement, lateral displacement, seismic, etc.) evaluations
- Recommendations for design and construction of retaining walls, including water-proofing recommendations
- Interior and exterior slab-on-grade recommendations
- Pavement design recommendations
- Construction recommendations
- Other recommendations as appropriate for the design and construction of the facility.

SECTION 7 MECHANICAL PIPING CRITERIA

7.1 General

Item	Parameter	Criteria	Notes
1	Equipment Design Approach	• Maximize consistency and optimize spare part requirements for mechanical equipment such as valves, actuators, flowmeter and other equipment across packaged treatment systems • Maximize access to mechanical equipment for O&M purposes • Provide necessary isolation valves to facilitate hydro testing; taking into account different pipe pressure classes	
2	Special Tools	Provide special tools required for equipment repair	
3	Equipment Pads	Provide housekeeping/plinth pads for all equipment	
4	Pipe Mounting in Trenches	Mount pipes within pipe access trenches to trench walls, to the extent possible	No pipe trenches are currently proposed for the project.
5	Pipe Labeling/Flow Direction	Provide painted pipe labeling, and painted flow direction arrows for proper operation for all pipework	• Labels for piping 2 inches and larger shall bear the full piping system name as shown in the Piping Schedule. Provide separate flow directional arrows next to each label. Color, size, and labeling shall conform to ANSI A13.1 and Z535.1. • Labels for piping shall be painted.
6	Joint Restraint	Provide restrained fittings for all pressure piping	
7	Spare Sample Taps	Include convenient spare sample taps throughout treatment process trains	• Sample taps shall be accessible and properly labeled • Locate sample taps in common areas with drains

8	Valve Arrangements	Provide isolation valves and bypass piping for critical mechanical equipment that require removal for routine maintenance/calibration	
9	Equipment Tagging and Labeling	Submit comprehensive tag program for all mechanical equipment and as specified in the individual sections of this Performance Criteria Report	• Provide a label for each pump, blower, compressor, tank, feeder, flocculator, flash mixer, clarifier mechanism, or other piece of mechanical equipment. Label shall show the equipment name and tag number. Labels shall be 1 1/2 inches (minimum) by 4 inches (minimum) brass, stainless steel, or aluminum. • Tag shall show the tag number and/or name or designation in coordination with the asset management criteria. • Provide stainless steel wire for tags. • All equipment that is designated as field painting shall be Tnemec 32R Light Gray or equal. Any factory finished equipment that was manufactured with their standard finish will be accepted as is. [PCO 91]

7.2 Piping

Item	Parameter	Criteria	Notes
1	Piping Schedule	Submit comprehensive piping schedule in detailed design indicating size, information, type, material of construction, lining, coating, and other critical information.	See partial piping schedule below indicating minimum requirements
2	Unions	Provide unions on threaded exposed steel piping 3 inches and smaller as needed to maintain valves and equipment.	
3	Painting and Coating: General	• Required for the interior and exterior surfaces of ferrous pipe	• All pipe color shall be gray, with the exception of color-coded chemical piping.

		• Pipe lining shall be appropriate for the application	• Cement-mortar lining shall be per AWWA C104. Lining thickness shall be the double thickness listed in AWWA C104, Section 4.7.
	Painting and Coating: Buried Pipes	• Asphaltic or epoxy coated and wrapped with polyethylene encasement • Epoxy thickness: 50 mils, 100 mils on nuts, bolts, and sharp projections	•
	Painting and Coating: Above-Ground Pipes	Provide epoxy with polyurethane topcoat on exposed pipe. Follow manufacturer's recommendations for surface prep for topcoating of fusion bonded epoxy surfaces	• Provide polyurethane topcoat on exposed pipe • All pipe color shall be gray, with the exception of color-coded chemical piping
4	Underground Pipe Marking	All buried non-metallic pipe must include an electronic detectable underground warning tape	•

Partial Piping Schedule

See P&IDs for piping types. Pipe schedule will be included in technical specifications.

7.3 Valves

Item	Parameter	Criteria	Notes
1	Valve Location	Valves shall be accessible (i.e., not buried), unless otherwise necessary. Minimize locating valves with actuators in confined areas, when possible.	
2	Valve and Gate Automation	Provide automation on all equipment needed for remote normal operation	
3	Valve Maintenance	• Incorporate dismantling joints where necessary into design layout to facilitate removal of valves • Provide access hatches, building entry, and lifting devices for large and critical valves	

4	Surge Control	Specify speed of opening and closing to avoid significant increase in pressures	
5	Labeling and Valve Tags	Label all valves with manufacturer's name and working pressure on durable label permanently affixed to the valve.	• Provide each valve of size 2 inches and larger with an identification tag. Tag shall be 2-inch-square or circular aluminum or 316 SS: W. H. Brady B-60, Seton Name Plate Corp. Series SVT, or equal. Aluminum tags shall have black-filled letters. • Tag shall show the valve tag number and/or name or designation in coordination with the asset management criteria. • Provide stainless steel wire for tags.
6	Painting and Coating: General	Required for the interior and exterior surfaces of valves	All exterior pipe color shall be gray, with the exception of color-coded chemical piping
	Painting and Coating: Buried Valves	• Epoxy coated and wrapped with polyethylene encasement • Thickness: 50 mils, 100 mils on nuts, bolts, and sharp projections	
	Painting and Coating: Above-Ground Valves	• Ferrous interior surfaces: epoxy. • Provide polyurethane topcoat on exposed valves and pipe. Follow manufacturer's recommendations for surface prep for topcoating of fusion bonded epoxy surfaces.	• Provide polyurethane topcoat on exposed valves and pipe • All pipe color shall be gray, with the exception of color-coded chemical piping

7	End Connections	• 2.5-inch and smaller may be provided with threaded or flanged end connections • 3-inches and larger require flanged end connections • Unless otherwise shown or otherwise specified, all flanged valves shall have ends conforming to AWWA C115, 125 lb flange	All pressurized connections shall have restrained fittings
8	Manufacturer	• All valves shall be by a single manufacturer to the extent possible • Manufacturer shall have a successful record of not less than 5 years in the manufacture of the valves selected	
9	Acceptable Manufacturers	• Gate Valves: Clow, AVK, American Flow Control, Waterous, Kennedy, DeZurik, or equal • Check Valves: M&H, Clow, DeZurik, or equal • Check Valves (Chemicals): Ryan Herco, GF Plastic Systems, Asahi/America, or equal • Butterfly Valves: Pratt, DeZurik, or equal • Pressure Reducing and Pressure Relief Valves: Cla-Val Company • Diaphragm Valves: ITT Grinnel, Asahi/America, or equal • Air release, Air and Vacuum, and Combination Air Valves: DeZurik, A.R.I. Flow Control Accessories, or equal • Solenoid Valves: Hayward, ASCO, DeZurik, or equal • Gates: Rodney-Hunt, Waterman, Whipps, Golden Harvest, or equal • Plug valves – Victaulic, Clow, DeZurik, Pratt, Milliken, or equal	

		• Telescoping Valve - Waterman Industries, Inc., Coldwell-Wilcox Company, or equal • Knife Gate Valve - DeZurik, ITT Fabri-Valve, or equal	
10	Ball Valves: PVC, CPVC	• Line size ball valve and union shall be installed upstream of each solenoid valve, in-line flow switch, or other in-line electrical device for isolation during maintenance • Body, ball, stem and connector: Schedule 80 PVC • Manufacturers: Hayward, Spears, Ryan Herco Products Corp, or equal	Provide vented ball for all valves in hypochlorite service
11	Ball Valves: Bronze, SS	Manufacturers: Apollo Ball Valve Division, Wall, or equal	
12	Material	• Select corrosion resistant and chemically compatible material and maximize durability of equipment selected • Gates, including body, gate, and trim, shall be 316L SS	
13	Valve Schedule	Submit comprehensive valve schedule in detailed design indicating size, tag information, type, material of construction, manufacturer, and other critical information.	

7.4 Valve Actuators

Item	Parameter	Criteria	Notes
1	Electric Actuators	• Provide on all equipment needed for remote normal operation • Manufacturers: AUMA, Rotorque, or equal	• Provide actuators from the same manufacturer throughout the facility • Must meet area classification requirements
2	Spur Gear and Hand Wheel	Required for gate valves 18-inches and larger	

3	Actuator Sizing	Oversize actuator to allow for aging, corrosion, scaling, clogging of equipment	Oversize 20 percent
4	Manual Operator: Exposed	• Worm gear drive and nut • Chain wheel, sprocket, and aluminum chain required if mounted more than 7 feet above the operating floor	
5	Manual Operator: Buried Valves	• Provide valve box, 2-inch square operating nut, and position indicator • Extension: required if top of valve nut is greater than 12-inches below the top of valve box	
6	Portable Valve Operator	Provide a portable electric non-rising stem valve operator with torque limiting adapter rated at 250 ft-lb	

7.5 Pumps

Item	Parameter	Criteria	Notes
1	Configuration	The pumps and pumping appurtenances shall be by a single manufacturer responsible for furnishing and functional operation of complete pump system	All pumps in plant shall be by same manufacturer to the extent possible
2	Testing	Submit non-witnessed Factory Acceptance Test data before shipment of the pump	
3	Design	Specify pump type and identify process. Specify performance curve and pump data. Specify electrical requirements and controls. Assemble drawings showing location and process. Specify pump drive and motor and provide bearing calculations, indicate points on H/Q curves, pump detailed description, installation drawings.	
4	Seals	• Provide mechanical and double mechanical seals wherever possible	

		• Mechanical seals shall be of the best quality, using the Manufacturer's suggested materials best suited for the specific application	
5	Flanges: Suction and Discharge	Cast Iron (ANSI/ASME B16.1), Class 25, 125, 250, and 800. Or ANSI/ASME B16.5	
6	Lubrication	• Vertical pump shafts (clean water): Product water lubricated • Deep-well/dry barrels: Water or oil lubricated bearings, seals, and enclosed line shafts • Vertical propeller, mixed-flow, and turbine pumps or bowl sizes 10-inches and larger (other than deep well pumps): stainless steel tube attached to the column for grease lubrication of the bottom bearing	
7	Vortex Suppressors	Provide for vertical pumps with marginal submergence	
8	Pump Casing	• Select materials based on specific application. Minimum material requirements include: • Ductile Iron, Austenitic (ASTM A 439) • Cast Iron, Stainless Steel or Bronze • Stainless Steel, Type 416 or 316, SAE63 Bronze • Hot-dipped galvanized (not buried or submerged), stainless steel (buried or submerged)	
9	Material	Select corrosion resistant and chemically compatible material and maximize durability of equipment selected	Provide duplex SS for RO concentrate pump materials
10	Pump Schedule	Submit comprehensive pump schedule indicating size, tag information, type, material of	

		construction, manufacturer, and other critical information	
11	Labeling and Pump Tags	Label all pumps with manufacturer's name and working pressure cast in raised letters on valve body	• Provide each pump with an identification tag. Tag shall be 2-inch-square or circular aluminum or 316 SS: W. H. Brady B-60, Seton Name Plate Corp. Series SVT, or equal. Aluminum tags shall have black-filled letters. • Tag shall show the valve tag number and/or name or designation in coordination with the asset management criteria. • Provide stainless steel wire.

7.6 Nuts and Bolts

Item	Parameter	Criteria	Notes
1	Bolts and Nuts for Flanges	• Bolts and nuts for buried or submerged Class 125 or 150 flanges and Class 125 or 150 flanges located indoors, outdoors above ground or in vaults and structures shall be Type 316 stainless steel conforming to ASTM A193, Grade B8M for bolts and ASTM A194, Grade 8M for nuts	Bolts used in flange insulation kits shall conform to ASTM A193 (Grade B7). Nuts shall conform to ASTM A194 (Grade 2H).
2	Lubricant for Stainless Steel Bolts and Nuts	Prior to assembly, coat threaded portions of stainless steel bolts and nuts with lubricant	Lubricant shall be chloride free and shall be RAMCO TG-50, Anti-Seize by RAMCO, Specialty Lubricants Corporation Husky™ Lube O'Seal, or equal

SECTION 8 ELECTRICAL SYSTEM CRITERIA

Electrical Features/Scope are summarized in the table below and detailed further within Section 8. The summary table shall govern in event of a disagreement with content in Section 8.

Key Overall Electrical System Features

- Onsite primary infrastructure to a utility pad-mounted transformer and for the transformer secondary lateral to the service switchboard per PG&E's requirements.
- Provide space for future PV equipment adjacent to the main service switchboard.
- A radial distribution network for both of the normal and emergency 480Y/277V, three-phase, four wire systems and the 208Y/120V, three-phase, four-wire systems within the site.
- A main electrical building housing the main service switchboard and transfer switch, 2 motor control centers for the headwork, dewatering area and chemical storage, and a transformer for serving the panel that will provide the 120V branch-circuits at and near the equipment.
- 1 motor control center located in RO electrical room to serve the RO, UV, Product Water, and **Administrative Building.**
- 1 Diesel Emergency Generator to backup the entire site.
- Site electrical facilities including power distribution and site lighting (reference Electrical Proposal Form for information)

Equipment – Utility Electrical Service

- Furnish and install 1 direct-buried PVC underground ductbank for the primary service PG&E cable as per the PG&E's requirement.
- Furnish and install the an utility transformer concrete pad as per the PG&'s requirements.
- Install the PG&E furnished utility transformer with secondary service rated at 480VAC.
- Furnish and install direct-buried PVC underground ductbanks from the utility transformer to a main service board in the Electrical Building per the PG&E's requirement.
- Furnish and install a main service board rated at 480VAC, 2000 Amp, with a utility metering package and utility cable entry compartment in the Electrical Building.

Equipment – Electrical Building

- A 40' X 12' X 10' (LXWXH) pre-engineering metal building with HVAC unit and lightings.
- The Electrical Building houses the utility main service board, an automatic transfer switch, future space for the PV equipment, 2 motor control centers, 480/280/120 dry type transformer, the main plant PLC panel, power and lighting panels.

Equipment – Main Service Switchboard

- A 480Y/277V, three-phase, four-wire, 2000A, indoor rated switchboard including pull section, distribution section, and automatic transfer section bussed together for a complete unit
- 4 X distribution breakers for 3 motor control centers and 1 future PV connection.
- Metering package for the utility power
- Surge protection device

Equipment – Site Electrical Distribution Infrastructure

- The underground direct-buried PVC ductbanks for the PG&E's cables will be per the PG&E's requirements. Manholes and handholes will be provided per the PG&E's requirements.

- All site underground duckbanks will be concrete encased Schedule 40 PVC conduits with buried depth per the City's requirements and electrical code requirements.
- All site underground conduits will be Schedule 40 PVC, concrete encased where under roads or the potential for other damage exists. PVC coated conduit for risers that penetrate concrete floors, or emerge from the ground to 6" AFF or grade. [PCO 87]
- All site interior conduits in process areas will be GRS conduits to 8' AFF, above 8' PVC SCH 40 or GRS at contractor's discretion (depending on supports) Chemical areas, GRS or PVC coated conduit depending on type of chemical within the containment areas. [PCO 87]
- All site exterior conduits, except when noted otherwise, will be GRS conduit or painted PVC SCH 40 at contractor's discretion. [PCO 87]
- PVC coated conduits in all exposed outdoor locations in Areas 20, 30, and 70 [PCO 87]
- Aluminum cable trays for different voltage classes as primary distribution raceway in non-hazardous area.
- Administration Building conduits will be EMT in walls and ceilings and MC cable in ceiling for lighting. [PCO 87]
- At the request of the City, all the exterior control panels provided by the electrical subcontractor, Packaged Headworks, Blower, Sanitary Lift Station, Belt Filter Press, and MBR Suppliers will have dead-fronts, excluding localized valve actuators or e-stops. [PCO 88]

Equipment – Motor Control Centers & VFDs

- 2 indoor rated MCC's in Electrical Building and 1 indoor rated MCC in RO Electrical Building.
- All MCC's are per IEEE and NEMA standards
- All MCC's have fully rated tin plated copper bus bar, hardwired magnetic combination starters with protection and feeder breakers.
- 18 pulse VFD's for equipment rated 100 hp or larger.
- VFD Motor Connections will be on the line side of the VFD- any NEC approved conduit/wire method Load side of VFD (VFD to motor)- if PVC conduit, VFD rated cable; if GRS conduit, standard 600V individual conductors. [PCO 87]

8.1 Utility Electrical Service

The City is coordinating the effort to obtain the electrical service from Pacific Gas & Electric (PG&E). Service voltage shall be obtained at 480Y/277V, three-phase four-wire. DB shall install the on-site infrastructure for the primary service to a utility pad-mounted transformer and for the transformer secondary lateral to the service switchboard as identified on the drawings prepared by PG&E. [PCO 055]

8.2 Data Service

The City is coordinating the effort to obtain the data service from the local utility. DB shall install the on-site infrastructure.

8.3 Alternative Solar Power

Provide sufficient floor area, headroom space, and clearances adjacent to the main service switchboard for installation of a future photovoltaic inverter, minimum 800kW, and future net energy metering switchboard for connection to the PG&E grid. Conduits of adequate sizes shall be installed between the inverter and grade

mounted handholes outside of the main electrical building, in quantities and locations as required for connection to the future photovoltaic strings. All monitor points and alarms for the proposed photovoltaic system shall be transmitted to the SCADA system.

8.4 Electrical Distribution

Provide a radial distribution network for both of the normal and emergency 480Y/277V, three-phase, four wire systems and the 208Y/120V, three-phase, four-wire systems. The main electrical building will house the main service switchboard and transfer switch, a motor control center for the dewatering area and chemical storage, and a transformer for serving the panel that will provide the 120V branch-circuits at and near the equipment. The generator shall be located in an exterior enclosure. Radial feeds from the service board distribution section shall be provided to motor control centers. The motor control centers and distribution switchboards shall include the feeders for distribution transformers and 208Y/120V, three-phase, four-wire panelboards in each electrical room.

8.5 Basic Electrical Work

8.5.1 Raceways

Item	Parameter	Criteria	Notes
1	Exposed	• PVC coated rigid steel conduit shall be used for all exposed that have a corrosive environment and coming out of the ground 6 inches above final grade (AFG). Above 6 inches AFG shall be galvanized rigid steel. [PCO 062] • Cable trays shall be ladder type construction and shall be metallic and bonded to ground. Power conductors and low voltage conductors (less than 50V) shall not occupy the same tray. Where cable tray is used for emergency system conductors, it shall be dedicated to emergency circuits only. • Wire basket cable tray may be used in office and/or in non-hazardous and non-corrosive locations for communication system conductors only. • Interior, exposed conduit in non-corrosive areas shall be rigid galvanized steel up to 8 feet above final floor (AFF). Above 8 feet AFF conduit shall be galvanized rigid steel or electric metallic tube (EMT). [PCO 062]	

		• Chemical areas shall be galvanized rigid steel or PVC coated galvanized rigid steel conduit depending on the type of chemical within the containment areas. [PCO 062]	
2	Concealed	Concealed conduits shall be rigid galvanized steel except in the Operations and Maintenance Buildings, where electrical metallic tubing may be used	
3	Underground	• Bury underground conduits containing maximum 600-volt conductor insulation a minimum depth of 24" from surface of finished grade to the top surface of the conduit. Where they run under roadways or parking areas, depth shall be 30" minimum from finished grade. • Exterior, underground, direct buried and concrete-encased conduit shall be schedule 40 PVC. [PCO 062]	
4	Final Connections	Use liquid-tight non-metallic flexible conduit for final connection to equipment	

8.5.2 Conductors

Item	Parameter	Criteria	Notes
1	Indoor Feeders and Indoor and Outdoor Brand-Circuits	Use 600V copper conductors with THWN/THHN insulation	
2	Outdoor Feeders and Load Side of VFDs	Use 600V copper conductors with XHHW insulation	
3	Terminations	Branch-circuit terminations in wet locations shall be listed for the applications. Provide insulated tap blocks for feeder splices.	

8.5.3 Wiring Devices

Provide power to receptacles from 208Y/120V panel boards. Feed adjacent receptacles from alternate panelboard circuits. Locate separately powered receptacles adjacent to HVAC and other specialized equipment. In interior and exterior process areas locate receptacles every 50 feet, and every 12 feet of wall space in occupied areas. Ground fault circuit interrupting (GFCI) type receptacles shall be located in lavatories, outdoors, wash-down process areas, below-grade structures, rooftops and tunnels. Provide

additional outlets at canopy poles around the vehicle equipment storage area and the parking canopy and include required conduit/power. See Attachment 1 [PCO 74]

8.5.4 Grounding

Provide a maximum 2 ohm resistance earth to ground and conform to IEEE Standard 142. Structures shall have perimeter ground grid with rods in test wells. Interconnect individual structure grounding systems. Building steel, process equipment, electrical equipment and enclosures, and exposed metal which might become a current conductor shall be connected to the ground grid. Exposed ground connections shall be compression lug type. Concealed, buried, or embedded ground connections shall be made by the exothermic method, except for the connection to the ground rod which shall be compression lug type. All conduits shall contain an equipment grounding conductor.

8.5.5 Boxes

Item	Parameter	Criteria	Notes
1	Underground Manholes and Handholes	• Provide concrete handholes with sufficient depth to accommodate the branch-circuits and/or feeders. Provide with steel lid in traffic areas and concrete lids in parkways and planters. • Provide concrete manholes with a minimum size of 4'6" x 8' x 8'd, permanent galvanized ladder, and pulling rings. • Provide fiberglass racks in each handhole with a footprint equal to or larger than 2'6" x 3'0" and in all manholes.	Provide H20 bridge loading in all areas with incidental or regular traffic
2	Cast-Iron Outlet Boxes	Install cast-iron outlet boxes in surface mounted applications. Provide explosion-proof boxes and fittings as required by the hazard classifications.	
3	Sheet-Metal Outlet Boxes	Provide sheet-metal outlet boxes at dry non-hazardous locations in the Operations and Maintenance buildings	
4	Pull Boxes	Provide ~~IP 68~~ NEMA 7 boxes in all classified area, NEMA 4X boxes in all exterior unclassified locations, NEMA 3R boxes inside the RO/UV building and Ops building outdoor non-corrosive electrical area, and NEMA 1 boxes in the indoor electrical rooms and indoor Ops building area. Please refer to PCO #93 for quantities, sizes and locations [PCO 93]	Locate pull boxes above grade to the extent possible

8.5.6 Identification

Item	Parameter	Criteria	Notes
1	Conduit Identification	Where electrical conduit is exposed in spaces with exposed mechanical piping that is identified by a color-coded method, provide color-coded identification on electrical conduit in a manner similar to piping identification	
2	Cable/Conductor Identification	Provide method for cable/conductor identification including voltage, phase, and feeder number on each cable and conductor in each box/enclosure/cabinet where wires of more than one lighting or power circuit occur or where alarm conductors of communication, signal, or alarm systems are present, except where another form of identification (such as color-coded conductors) is provided	
3	Equipment Labeling	Submit comprehensive labeling schedule indicating tag information, type, material of construction, manufacturer, and other critical information	

8.5.7 Supports and Anchors

Provide seismic anchorage for all floor, wall, and rack mounted electrical equipment. Base-specific seismic criteria shall use values determined in accordance with ASCE 7-102 as amended by the 2016 CBC, Chapter 16. Arrange for grouping of parallel runs of horizontal conduits to be supported together on seismically braced trapeze type hangers where possible.

8.6 Distribution Equipment

8.6.1 General

Certify distribution equipment for base-specific seismic criteria using values determined in accordance with ASCE 7-102 as amended by the 2016 CBC, Chapter 16. Provide withstand ratings greater than the maximum short-circuit current available at the line terminals of the equipment. Series rated systems shall not be used.

8.6.2 Switchboards

Item	Parameter	Criteria	Notes
1	Service Switchboard	Provide 480Y/277V, three-phase, four-wire switchboard with adequate capacity to carry the calculated load. Include pull section, distribution section, and automatic	

Item	Parameter	Criteria	Notes
		transfer section bussed together for a complete unit.	
2	Circuit Breakers	Provide main circuit breaker and distribution circuit breakers rated for the calculated load. Provide insulated case power circuit breakers with zone selective interlocking for system selectivity.	
3	Ground-Fault Protection	Provide ground-fault protection for the main circuit breaker and distribution circuit breakers immediately downstream of the main circuit breaker	
4	Bus Material	Provide fully rated tin plated copper bus bars. Tapered bus shall not be used. Provide with full rated neutral. Provide copper ground bus.	
5	Enclosure	• All cabinetry located outdoors should be fully enclosed, no false fronts or HMI on outside doors. • Provide NEMA 4X enclosure for exterior locations and in process areas. Install in a dry non-hazardous location where possible.	Any internal equipment requiring regular maintenance shall be out of arc flash area

8.6.3 Motor Control Centers

Item	Parameter	Criteria	Notes
1	General	Provide grouped motor controls in a motor control center including supporting structures, bus systems, starter units, controllers, disconnects, overload protection, and motor control accessories	
2	Standards	The control centers shall be NEMA Class II, Type B, plug-in, designed, manufactured, and tested to meet the latest IEEE and NEMA standard	
3	Controls	• Selector switches and pilot lights shall be heavy-duty, oil-tight, and have the number of positions and poles indicated • Control relays shall be machine tool type with 115-volt AC coils	

Item	Parameter	Criteria	Notes
4	Starters	Except where VFDs are provided, magnetic starters shall be combination motor circuit protector type, full voltage, single speed or two speed, reversing or non-reversing	
5	Bus Material	Provide fully rated tin plated copper bus bars. Provide with full rated neutral. Provide copper ground bus.	
6	Enclosure	• All cabinetry located outdoors should be fully enclosed, no false fronts or HMI on outside doors. • Provide NEMA 4X enclosure for exterior locations and in process areas. Install in a dry non-hazardous location where possible.	Any internal equipment requiring regular maintenance must be out of arc flash area

8.6.4 Distribution Transformers

Provide dry-type distribution transformers with aluminum windings and enclosures suitable for the installed environment. Transformers shall have 480V primary and 208Y/120V three-phase, four-wire secondary.

8.6.5 Panelboards

Item	Parameter	Criteria	Notes
1	Enclosures	• All cabinetry located outdoors should be fully enclosed, no false fronts or HMI on outside doors. • Provide NEMA 4X enclosure for exterior locations and in process areas. Install in a dry non-hazardous location where possible.	Any internal equipment requiring regular maintenance shall be out of arc flash area
2	Circuit breakers	Provide bolt fastened thermal magnetic circuit breakers with ratings appropriate for the calculated loads. Provide 30% spare breakers in each panel.	
3	Bus Material	Provide fully rated tin plated copper bus bars. Provide with full rated neutral. Provide copper ground bus.	

8.6.6 Motors

Item	Parameter	Criteria	Notes
1	Motor Selection	Select motors to permit the connected load to develop its specified output continuously	

Item	Parameter	Criteria	Notes
		without encroaching on the service factor under normal operating conditions. The service factor shall be 1.15 for motors 200 horsepower and less. Motors larger than 200 horsepower shall have a service factor of 1.0.	
2	Motor Design	• Design motors for full voltage starting and frequent starting, where required. Provide motors suitable for continuous duty in the specified ambient conditions. Intermittent duty motors will be selected where recognized and defined as standard by the equipment standards and codes. • The following design parameters shall be considered: Motor manufacturer, environment, including special enclosure requirements, voltage, frequency, and phases, running and starting requirements and, limitations and duty cycle, motor type (synchronous, induction, DC, etc.) and construction, power factor, service factor, speed and direction of rotation, insulation, bearing construction, rating life of rolling elements, and external lube oil system for sleeve or plate bearings, ambient noise level and noise level for motor and driven equipment, termination provisions for power, grounding, and accessories, installation, testing, and maintenance requirements, special features (shaft grounding, temperature and vibration monitoring, etc.), and motor space heater requirements.	
3	Motor Starting	The torque of all induction motors will be required to accelerate inertia loads of both motor and driven equipment to full speed without damage to the motor or other equipment. Provide maximum 20 percent voltage drop from the specified motor	

Item	Parameter	Criteria	Notes
		nameplate rating for motor starting. Provide minimum NEMA size 1 starters.	
4	VFDs	Motors connected to VFDs shall be inverter duty rated	

8.6.7 Motor Controls

Item	Parameter	Criteria	Notes
1	Combination Starters	• Provide full voltage starting for all motors less than 25 HP that are not operated with a VFD. Minimum size starter shall be NEMA size 1. • Unless motor is operated with a VFD, Solid State Reduced-Voltage (SSRV) soft starters shall be used for motors larger than 25 HP where appropriate.	
2	Variable Frequency Drives (VFDs)	Provide 18 pulse VFDs for drives 100 hp and larger	
3	Manual Motor Starters	Where fractional horsepower motors are not automatically started, provide manual motor starters using toggle switch mechanism and enclosure rated for the environment. Provide with or without overcurrent protection as required by the installation.	
4	Enclosures	• All cabinetry located outdoors should be fully enclosed, no false fronts or HMI on outside doors. • Provide NEMA 4X enclosure for exterior locations and in process areas. Install in a dry non-hazardous location where possible.	
5	Pilot Lights and Switches	• Selector switches and pilot lights shall be heavy-duty, oil-tight, and have the number of positions and poles indicated • Control relays shall be machine tool type with 115-volt AC coils	

8.6.8 Standby Generator

Item	Parameter	Criteria	Notes
1	Capacity	Provide a standby generator rated 480Y/277V, three-phase, four-wire with capacity to carry the entire treatment plant electrical load. The generator shall be connected and operated as a separately derived system.	
2	Fuel Source	Provide diesel powered generator. The generator shall have a double containment separate aboveground double containment fuel tank, with leak detection and sufficient fuel storage to operate the plant on backup power for a minimum of 24 hours without refueling. Provide alarm contacts for reporting to the SCADA system.	
3	Main Circuit Breaker	• Provide a main circuit breaker rated to carry the calculated load. Provide insulated case power circuit breakers with zone selective interlocking for system selectivity. • The circuit breaker shall be either wall or rack mounted at a location adjacent to the generator enclosure.	
4	Enclosure	Provide a sound-attenuated weatherproof generator enclosure meeting 70dB(A) at fifty feet	
5	Accessories	Provide generator enclosure complete with battery charger, engine block heater, and generator condensation heater, battery, and exhaust silencer	
6	Engine Oil	DB to provide initial fill of oil and the first oil change, including oil filters	
7	Alarms	Provide electronic generator control panel with discrete alarm contacts for each alarm for reporting on the SCADA system. Comply with NFPA 110 for remote alarm annunciation.	Coordinate with Section 9

8.6.9 Automatic Transfer Switch

Provide a 480V four-pole transfer switch for connecting the plant load to the standby generator upon loss of utility company power. Transfer switch shall be solenoid operated and mounted in a bussed lineup with the main service switchboard for installation in a dry non-hazardous location.

8.7 Lighting Equipment

Item	Parameter	Criteria	Notes
1	Illumination Engineering Society (IES)	Comply with the IES Recommended Practice for Lighting Industrial Facilities RP-7-17.	
2	Interior Lighting	• Provide LED strip lighting with door switch inside control panels if the enclosure size is greater than or equal to 30" wide and greater than or equal to 12" deep. • Adequate lighting, ventilation and access for maintenance or removal of equipment and screenings shall be provided. Adequate lighting throughout the wastewater treatment facility shall be provided, particularly in areas of operation and maintenance activities. • Provide metallic or non-metallic luminaire housings appropriate for the classification of the area. • Lighting shall be included in all treatment buildings. Battery operated emergency lights shall be provided at all confined spaces. Lights shall be located in an area that is easily accessible to replace components.	
3	Exterior Lighting	• Provide full cutoff LED site lighting in each process area. Lighting standards adjacent to any open process structure flush or below grade shall be provided with hinged pole base. Provide poles with 316SS anchors and hardware. • Aim exterior pole and building lighting to avoid any light trespass on adjacent property lines. All pole and building luminaires shall be full	Coordinate with Section 9

		cutoff and located to minimize glare.	
4	Lighting Controls	• Provide switches, photocells, and receptacles at all lighting poles. Provide for automated lighting control through the SCADA system so that the facility is only illuminated to the degree necessary to maintain safe operation. • Provide lighting software calculations showing compliance with California Title 24 Energy Standard requirements in all areas.	

8.8 Fire Alarm System

Provide a plant-wide addressable fire detection and alarm system, with audible as well as visual alarm signals, conforming to the requirements of the local fire marshal, NFPA, and Factory Mutual requirements. Fire alarm system master control panel will provide dry contact outputs to SCADA for general alarm, supervisory, and trouble signals. Since the facility is not constantly occupied, master fire alarm control panel shall simultaneously contact the fire department and annunciate in the operations control room when any alarm is activated. [5/29/19 Meeting Decision]

8.9 Hazardous and Environmental Locations

Item	Parameter	Criteria	Notes
1	Classified Locations	Classify areas where flammable and combustible liquids, gases, and dusts are handled and stored for determining the minimum criteria for design and installation of electrical equipment to minimize the possibility of ignition. Use the latest edition of NFPA 820 and Article 500 of the latest California Electrical Code for determining the appropriate classification.	
2	NFPA 820	Enclosed areas with exposure to raw wastewater, wastewater sludges, and corrosive or hazardous atmospheres will require that the lighting and electrical systems be of the appropriate hazard classification as defined in NFPA 820	
3	Electrical Code	Install electrical equipment in areas classified as hazardous in accordance with the requirements of Articles 501 and 502 of the California Electrical Code (latest edition)	

Item	Parameter	Criteria	Notes
4	Drawing Notations	Identify classified locations in all process areas on the construction drawings	
5	Confined Spaces	The design shall minimize confined spaces to the extent possible.	
6	Environmental Locations	All electrical equipment shall be rated for the environment in the installed locations. Outdoor installations shall include equipment rated for wet locations. Identify all other indoor wet, damp, and dry locations on the drawings. All cabinetry installed outdoors or in damp or wet locations shall be fully enclosed, with no false fronts or HMI on outside doors. Only lights are allowed on top of cabinetry.	

8.10 Electrical System Studies

Item	Parameter	Criteria	Notes
1	Preliminary Short-Circuit Study	During the design phase, prepare a preliminary short-circuit study based on maximum available fault current provided by the utility. The results of this study will determine the minimum withstand and interrupting ratings of the electrical equipment.	
2	Final Short-Circuit Study	Prepare a final short-circuit study using the as installed feeder lengths. The results of this study will be used to complete the Coordination Study.	
3	Coordination Study	Prepare a Coordination Study showing required selective coordination between the installed overcurrent devices. The results of this study will be used to complete the Arc-Flash Study.	
4	Arc-Flash Study	Prepare an Arc-Flash Study to determine the incident energy levels, protection boundaries and personnel protective equipment	
5	Computer Program	Perform each electrical system study using software purchased from industry	

Item	Parameter	Criteria	Notes
		recognized organizations. Provide for submittal of the project specific software results for each electrical system study.	

8.11 Electrical Testing

Item	Parameter	Criteria	Notes
1	Manufacturer Requirements	Perform all field testing per manufacturer's instructions. Submit results of testing.	
2	ANSI/NETA	Provide electrical system testing as identified in Standard for Acceptance Testing Specifications ANSI/NETA ATS, Latest Edition. Submit results of testing.	
3	NFPA 110	Test generator and generator alarms per the requirements of Standard for Emergency and Standby Power System NFPA-110-2016. Submit results of testing.	
4	NFPA 72	Test fire alarm system per the requirements of National Fire Alarm and Signaling Code NFPA 72 (latest edition). Submit results of testing.	

SECTION 9 INSTRUMENTATION AND CONTROLS

Instrumentation and Control Features/Scope are summarized in the table below and detailed further within Section 9. The summary table shall govern in event of a disagreement with content in Section 9. Attachment 3 to Exhibit B documents changes made to comply with portions of the SCADA Masterplan as agreed. Where there is a discrepancy, Attachment 3 shall govern over both Section 9 and the summary table below. [PCO 018]

Key Overall I&C Features

- A self-healing fiber optic ring configuration for the plant control network.
- Ethernet based communications between the Plant PLCs and the SCADA I/O servers.
- Ethernet based communications between Plant PLC's and vendor PLC's.
- Distributed Remote I/O panels in RO area, Chemical area, MBR area, Solids area, and Headwork area to minimize hardwired cabling.
- Dual firewall DMZ (demilitarized zone) design to separate the Plant Control Network and the Office Network.
- Redundant Historian Servers and I/O Servers to increase the reliability of the SCADA network.
- CMMS Package for maintenance purpose.
- Wireless network within the site facilities for the ease of access of the plant control network.
- Multiple SCADA HMI licenses for on-site and off-site accesses.
- UPS for main Plant PLC, SCADA servers and operation computers.

Equipment – PLC, SCADA

- The main Plant PLC's make and model will be in accordance to the SCADA Master Plan requirement.
- Redundant processors, communication modules and power supply modules for the main Plant OLC.
- The main Plant PLC located indoor in the Electrical Building.
- Redundant I/O servers and Historian servers will be provided.
- 1 X Operator PC with full SCADA HMI run-time license, 1 X Engineering Workstation with full SCADA development license will be provided.
- 3 additional SCADA HMI run-time licenses will be installed on the City's remote computer and tablet PC's. 1 additional SCADA Thin client license will be provided for the Maintenance Building Work Station[PCO 100].
- At the request of the City, all the exterior control panels provided by the electrical subcontractor, Packaged Headworks, Blower, Sanitary Lift Station, Belt Filter Press, and MBR Suppliers will have dead-fronts, excluding localized valve actuators or e-stops. [PCO 88]
- 24VDC Digital Output Circuits will be used for the plant control system [PCO 90]

9.1 General

The following scope is not inclusive of scope changes necessary to comply with the newly developed SCADA Master Plan or City requests such as PLC uniformity, replication of vendor PLC controls in main PLC, and remote operation of the plant. A separate scope process is working out that scope for inclusion into this document. Currently PLC uniformity has been provided for the MBR package, packaged headworks system and the RO system. At this time, all other vendor-supplied PLCs are the vendor standards and are pending future changes. [PCO 037] [PCO 082]

9.2 System Description

9.2.1 Plant Architecture and Software

This section describes the plant architecture, from the Wide Area Network (WAN), through the Plant Local Area Network (LAN) and the PLC network to the instrumentation networking.

Item	Parameter	Criteria	Notes
City Wide Area Network			
1	Communications Medium	• Data transmission to be via encrypted packet-switched network communications over the telecommunications provider network • City will provide phone/internet service facilities and connection point at the front gate of the WRF site for connection to plant by DB.	
2	Bandwidth	Sufficient bandwidth will be provided by City for ultimate plant capacity	
3	Transitional Operation and Commissioning	• Remote monitoring shall be integrated into the design as necessary for the DB to monitor the plant during the Transitional Operation period • Any licenses purchased for Transitional Operation period shall be transferred to the City when the Transitional Operation period is completed	For example, a View Client license on a nominated, dedicated machine in another operations facility may be required
Plant Local Area Network			
1	Server Hardware	• Two (2) local redundant servers with secondary network cards and Redundant Message Channel between the two servers installed in a server rack • Hot standby required for backup server • Server operational status to be rotated monthly	
2	Human Machine Interface (HMI)	• Workstations with full control and monitoring of the WRF. • Wireless access points throughout the plant to enable full coverage to the perimeter of the facility. Operators shall be able to access	

Item	Parameter	Criteria	Notes
		the full software HMI system via tablet computers. • Tablet computers to be provided by the City. DB to install software and integrate tablet computers. • Wireless network shall be a fully encrypted, secure network. • Application Objects Servers running on primary and redundant server hardware.	
3	Historian	• Historian by manufacturer of HMI Software. • License shall include sufficient tags for the entire plant and 20% spare at the end of the Transitional Operation period. • Redundant arrangement, with a historian running on each of the two (2) local servers (main and backup). The primary historian will be a full historian and the backup will be a local (7-day) historian. • Historian client shall run on each of the workstations.	
4	Interface with PLC Network	A data access server and device communication drivers shall run on each of the primary and backup servers to communicate with the PLC network	
5	Dial-out Alarms	Alarm notification software shall be installed on both servers, only running on the active server	
6	Licensing	• All licensing required for the local Historian, Alarming and SCADA system software shall be furnished by the DB • During the operations period the City shall cover the update costs for the local equipment as new versions of the software are released, however the DB Transitional Operation staff shall be responsible for coordinating and scheduling the installation of updates	

Item	Parameter	Criteria	Notes
		• The DB shall be responsible for costs associated with any upgrade required to the software licenses arising from incorrect specification, or changes initiated by the DB during the Transitional Operation period • At the end of the Transitional Operation period all software shall be fully updated to the latest version	
7	Business Network	Provide access to City Business Network in all offices in Operations Building	• City utilizes Cityworks at City Hall • Fiber-optic service to WRF site will be provided by others
8	Computerized Maintenance Management System (CMMS) and Implementation	• The DB is required to provide a CMMS to allow the City to manage its resources, work orders, delivery of services, and monthly costings for payment purposes to manage and report its operational, minor maintenance, and major maintenance works. • The DB shall be responsible for providing a CMMS system that can publish data and reports. • The DB shall be responsible for inputting all asset data into the CMMS. • The DB shall provide integration services focused on publishing of data from the SCADA system to the CMMS in batch or real time, to support the following: o Asset or equipment statistics that would be captures in the CMMS to trigger preventative maintenance work, including: run hours, flows, pressure readings (or pressure differentials) o Triggering of a work or service request when an alarm is identified in the process (identifying the	Asset ID to align with SCADA and asset labeling/tagging program by DB

Item	Parameter	Criteria	Notes
		type of alarm (e.g. high bearing temperature), SCADA location and SCADA tag) o Triggering of a simple work order when a fault is identified in the process (identifying the type of fault (e.g. electrical failure), SCADA location and SCADA tag) o Ability to assess data from the SCADA historian on an ad hoc basis to analyze equipment process data e.g. availability, pressures, flows, and temperatures. • Include all spare parts into the CMMS for the real-time tracking of Capitalized Assets spare parts until installed as fixed working assets.	
Programmable Logic Controller (PLC) Network			
1	Communications	• Ethernet shall be used for communications between PLCs and the SCADA server. • A self-healing Ethernet fiber optic ring shall be installed for Ethernet communications around the plant. Convergence time after failure of a single component or switch shall be adequate to prevent plant shutdown. • Ensure bandwidth is suitable for ultimate data requirements.	
2	Locations of PLCs and Remote IO	• Consolidate operation of multiple HMIs by providing operator access nodes located throughout the plant utilizing simple computer workstations • Remote IO and PLCs shall be installed in a manner that minimizes hardwire and field network cabling to instruments. Install in locations with a high density of I/O	

Item	Parameter	Criteria	Notes
3	Vendor Packages	• Vendor PLCs for each package system shall communicate via Ethernet with a local area PLC	DB shall ensure fully integrated and tested communications with all vendor systems.
4	Access to PLC information	All PLC information shall be accessible to the operator via the workstations in the control room, and at operator access nodes located throughout plant. This shall include vendor package system PLCs.	
Field Bus Device Network			
1	Field Connections	Hardwired to the nearest area MCC or Control Panel	
2	Requirement for Networking Devices		Hardwired instruments shall be furnished. This section is therefore inapplicable.
3	Field Bus Compatibility		Hardwired instruments shall be furnished. This section is therefore inapplicable.
4	Industry Standard		Hardwired instruments shall be furnished. This section is therefore inapplicable.

9.2.2 Redundancy, Reliability, and Spares

Item	Parameter	Criteria	Notes
1	Requirement	The inventory of spares shall be maintained during the DB Transitional Operation period such that all spares noted in the original inventory are still available at the conclusion of the Transitional Operation period	
2	PLC	Online redundant PLCs may be required for critical processes	
3	PLC Uninstalled Spares	• Provide spares sufficient to allow any of the following to be swapped out on failure: o PLC IO cards (hot-swapped) o backplane o CPU o Power supply	

Item	Parameter	Criteria	Notes
4	I/O Cards	Duty/standby unit I/O and equipment from separate process trains shall be connected to separate I/O cards	
5	I/O Capacity	Installed spare IO capacity of 20% in all PLCs, excluding vendor-supplied PLCs associated with specific equipment	
6	Program Backup	• Programs and configuration backups shall be stored for fast upload into new modules or CPUs if they are replaced • During Transitional Operation period backup copies of the PLC programs will be made every 2 months, minimum	
7	Server Redundancy	Provide redundant servers for HMI Application Servers, Device Integration Servers and Historian	Provide hot standby for SCADA server
8	Power Supply	PLC Hardware Racks shall have adequate power supplies installed to support a minimum of 25 percent I/O expansion	
9	Reliability	The network system shall be designed to be robust and reliable and shall meet latest Department of Homeland Security (DHS) Best Management Practices (BMPs)	Coordinate with SCADA Master Plan
10	Battery Backup & UPS	All control CPU's, PLC's and additional hardware necessary to keep the WRF functioning or automatically restart after a power loss shall be powered through UPS power circuit(s). This requirement includes the main operation control room computers and monitors.	

9.3 Cyber Security

Item	Parameter	Criteria	Notes
1	Software	• Provide Host Intrusion Detection (HID) and Malicious Intrusion detection software on all SCADA computers hosting operating systems, as well as computers identified as functioning only as	Coordinate software with SCADA Master Plan

Item	Parameter	Criteria	Notes
		Human Machine Interface (HMI) nodes • Configure the software to interface with the SCADA system software, such that abnormal conditions or intrusions are annunciated on SCADA operator PCs • Make all log files accessible on SCADA operator PCs	
2	SCADA Login and Passwords	• Require user specific operator login credentials for access at all computerized host access points • Provide prescribed automatic logout functionality (i.e. logout upon programmable period of inactivity) • Coordinate login credential protocol with Owner • Provide unique login identification for all users with programmable access rights	Coordinate with SCADA Master Plan
3	Default Passwords	Delete all default login credentials, and store passwords in a secure location, once	
4	Secure Design	• Apply network architecture design elements that effectively implement firewall appliances, data diodes, data encryption appliances, and data encrypted communications mediums to prevent network intrusion and unauthorized data access • Utilize industry best practice and design in accordance with ISA/IEC-62443 Industrial Network and System Security • Provide system operator notification indicating system and device status, with controls that permit manual and automatic blocking of network access points • Comply with latest Department of Homeland Security (DHS) Best Management Practices (BMPs)	Coordinate with SCADA Master Plan

9.4 Control System Hardware

9.4.1 Programmable Logic Controllers

Item	Parameter	Criteria	Notes
1	Manufacturer	Area PLC Manufacturer shall be by same manufacturer	Coordinate with SCADA Master Plan
2	Operator Controls	All PLC programs shall be configured to allow modification to set points, pump sequencing, timers, etc. readily by Plant personnel	
3	Vendor Package Systems	• Vendor PLCs shall have processor program and vital configuration information backed up in a similar manner to the other site PLCs.	
4	Latest Equipment	Each PLC shall utilize the latest CPU processors, communications modules and the latest I/O modules	
5	Programming Software	The PLCs shall be programmed using the latest version of software identified in the SCADA Master Plan	
6	Input/Output	• Input modules shall be 24 volts Direct Current (DC) modules only • Output modules shall be relay modules used to trigger interposing relays • Analog modules shall be 4-20 mA 24VDC isolated input and output channel design • Analog input isolators shall be used • Utilize RTD modules for RTD monitoring • All analog inputs shall be scaled into specified engineering units at the PLC • High and low alarm trip points shall be provided at 90% and 10% of span for all analog points	
7	Transient Voltage Surge Suppression (TVSS)	All analog signals exiting buildings to or from devices or instruments shall have transient voltage surge suppression (TVSS) to reduce risk of lightning or power surge conditions	
8	Startup Procedure	• All PLCs shall be configured to have a startup procedure in the event that a PLC needs to be shut down and restarted	

		• The startup program shall have either a fixed startup procedure or have retentive values	
9	Programming	• Use object-oriented programming, based on function blocks for all typical equipment and functions, in accordance with IEC 61131-3 • Configured to allow modification using the programming and integration devices and software installed in the system	

9.4.2 Instrumentation and Field Devices

Item	Parameter	Criteria	Notes
1	Level: Radar	• Manufacturer: ABB, Siemens, Rosemount, Endress & Hauser or equal • Measurement Range: 0 % through 100 % level • Measurement Resolution: 0.1 inch or less • Measurement Accuracy: +/- 0.25 % of measured distance for distances greater than 3.3 feet	Consider where foaming may be an issue, especially in cases where ultrasonic LT may not be suitable
2	Level: Ultrasonic	• Manufacturer: ABB, Siemens, Rosemount, Endress & Hauser or equal • Measurement Range: 0 % through 100 % level • Measurement Resolution: 0.1 inch or less • Measurement Accuracy: +/- 0.25 % of measured distance for distances greater than 3.3 feet	Non-contact level monitoring
3	Level: Pressure	• Manufacturers: ABB, Siemens, Rosemount, Endress & Hauser or equal • Measurement Accuracy: +/- 0.1 % of range.	Where non-contact level monitoring is not required and ease of access to the transmitter is desired e.g. water tanks
4	Level: Submersible Hydrostatic	• Manufacturers: ABB, Siemens, Rosemount, Endress & Hauser or equal • Measurement Accuracy: +/- 0.25 %	Covered basins
5	Level: Conductivity Probe	Manufacturers: Warrick or equal	
6	Level: Float Switch	• Manufacturers: Magnetrol, Kari, Flygt, or equal • Mercury shall not be acceptable in float switch devices	Level alarm detection. Not used for primary process control applications.

7	Pressure: Absolute, Diaphragm Type	• Manufacturers: ABB, Siemens, Rosemount, Endress & Hauser or equal. • Accuracy: +/- 0.1 % of range • Chemical Installation: Isolation Diaphragm Seal • Calibration/Testing: 3-way valve manifold for calibration/testing and tapping point for pressure gauge	Pipe pressure, pump discharge/suction, general process pressure
8	Pressure: Differential	• Manufacturers: ABB, Siemens, Rosemount, Endress & Hauser or equal • Accuracy: +/- 0.1 % of range • Chemical Installation: Isolation Diaphragm Sea • 3-way valve manifold for calibration/testing and tapping point for pressure gauge	Pressure drop across filters, etc
9	Pressure Switch	Manufacturers: Ashcroft or equal.	
10	Flow: Electromagnetic, Full Pipe	• Manufacturers: ABB, Siemens, Rosemount, Endress & Hauser or equal • Installation: Vault or above ground. Shall not be direct buried • Maintenance: Provide maintenance bypass for critical applications where a bypass or standby does not exist • Accuracy: Max 1 % of measured, for flow velocities between 10 % and 100 % of full scale • Grounding: Provide grounding rings on all installations • Repeatability: Max 0.25 % of full scale	Primary and secondary process flows
11	Flow: Open Channel	• Manufacturers: ABB, Siemens, Rosemount, Endress & Hauser or equal • Accuracy: Product shall be chosen for maximum accuracy based on the dimensions and flow pattern of the channel	
12	Flow: Air	Manufacturers: FCI Insertion, or equal	
13	Flow: Liquid Switch	Manufacturers (thermal flow switch): Dwyer, IFM, or equal	Pump no flow, sample line no flow, etc.
14	Flow: Air Switch	Manufacturers: FCI, or equal	Ventilation/extraction fan no flow, etc.
15	Limit: Switch	Manufacturer: Square D, Class 9007 Type C, or equal	

16	Temperature: Transmitter	Manufacturer: ABB, Siemens, Rosemount, Endress & Hauser or equal	Process temperature
17	Temperature: Switch	Manufacturer: Ashcroft, Allen Bradley, or equal	
18	Vibration: Transmitter	Manufacturer: Bently Nevada, or equal	Vibration monitoring for large pumps, motors, blowers, etc.
19	Online Analyzers: General	All online analyzers should be same manufacturer to extent possible	Hach is preferred
20	Residual Chlorine Analyzer	• Manufacturer: Hach, or equal • Type: Free chlorine type • Accuracy: Max + 0.5% of reading • Repeatability: Max 0.2% of reading.	
21	Turbidity Analyzer	• Manufacturer: Hach, or equal • Accuracy: Max 2% of NTU reading • Repeatability: Max 1% of NTU reading	Turbidity analyzers shall be provided in an enclosure to protect them from the elements. [PCO 052]
22	TOC Analyzer	• Manufacturer: Hach or equal • Accuracy/reliability: Max + 3% of reading or 0.3 mg C/L • Compensation: Automatic compensation for atmospheric pressure changes • Other Requirements: In addition to the above requirements, DB specification shall include requirements for self-testing and self-cleaning requirements, sample system and pumps, service frequency, cycle time, etc.	Regulatory monitoring for plant product water
23	pH Analyzer	• Manufacturer: Hach, or equal • Accuracy: Max + 0.5% of reading • Repeatability: Max 0.2% of reading	
24	Conductivity Analyzer	• Manufacturer: Hach, or equal • Accuracy: Max 3% of reading • Repeatability: Max 0.2% of reading	
25	Exterior Lighting	All exterior lighting shall be SCADA controllable (on-off times)	

9.4.3 Junction Boxes

Item	Parameter	Criteria	Notes
1	Mounting	Shall be accessible from floor or platforms	

2	Doors	Doors shall be able to open without interference	
3	Pull Boxes	Provide above-grade pull boxes to the extent feasible	

9.4.4 Local Control Panels

Item	Parameter	Criteria	Notes
1	Location	• Located close to the equipment • Local control switches and indicators only where required to address specific safety or maintenance concerns, otherwise all manual control shall be available via SCADA only (accessible locally via wireless tablet or operator node computers)	
2	Local-Off-Remote Switch and Control Devices, Indicator Lights and Pushbuttons	• Where required, LOR switch shall allow an operator to take manual control of a device or piece of equipment and operate it from that panel manually. • LCPs should be protected from the weather and/or be appropriate for the environment that they are operated in. All exterior enclosures shall be NEMA 4X.	
3	Enclosures	• All cabinetry located outdoors should be fully enclosed, no false fronts or HMI on outside doors. • Any internal equipment requiring regular maintenance shall be out of arc flash area.	

9.4.5 Instrument Mounting and Access

Item	Parameter	Criteria	Notes
1	Housing	All outdoor process instruments shall be housed in IP68, NEMA 4X enclosures, or vendor requirements, whichever is more stringent	
2	Access	Access shall be considered in the selection of instrumentation. For example, tanks shall be measured using pressure at the base of the tank wherever practical, to eliminate the need for maintenance access to the top of tanks.	

3	Instrument Height	Instruments mounted at a working level between 3 and 5 feet above the operating floor	
4	Indicator Height	Process indicators and indicating transmitters mounted in a position that is readable by an operator without requiring the use of a ladder or the building of platforms	
5	Capillary Tube Installation	Temperature and pressure instruments capillary sensors shall be installed and clamped in tube racks. Excess capillary tube shall be coiled and clamped to the mounting stand below the instrument.	
6	Grouping	Instruments located near each other shall be grouped to the maximum extent possible on a common mounting stand, wall bracket or instrument rack	
7	Dirt/Moisture Removal	Instrument impulse lines shall incorporate a blowdown leg or contamination accumulation leg for the removal of dirt and moisture	
8	Isolation Valves	• Instrumentation taps to process lines shall be isolated by a root valve at the connection • Isolation valves for taps to process lines shall be 1/4-turn ball valves of materials compatible with the process fluid • Isolation valves for chemical service shall match isolation valves used in other portions of that chemical piping	
9	Analyzers	• Analyzers for primary process lines shall be installed in bypass assemblies external to the main process headers to allow routine maintenance • Analyzer assemblies shall include an isolation valve at each process connection tap, pressure regulator, manual sample valve, rotameter flow element with integral flow metering valve, check valve, miscellaneous piping and fittings • Generally, panel mounted and located in close proximity to the relevant sample point in a designated analyzer room (where possible) for improved access for common operational and maintenance activities on these units	Where possible, flow through analyzers shall be provided indoors or in shed to protect from the elements. Submersible probes shall be installed adjacent to their sampling location. [PCO 052]

		• The analyzer waste streams shall be discharged into a tundish and drained to a common collection point for either pumped return to a specified point along the process or drained to waste • All analyzers shall have zero flow detection and pressure and flow control valves on the inlet to ensure a constant rate of feed through the analyzer • Manual sample points shall be provided for sampling water at various points through the main process, typically with each change in process unit and upstream and downstream of chemical dose points for manual checks of water quality and chemistry • Assemblies for analyzer sensors which must remain wetted at all times (e.g., pH sensors) shall incorporate a vacuum breaker in the drain piping • Sample drain shall be routed to a hub drain	

9.5 Monitoring and Control

9.5.1 Control Philosophy

General control descriptions for key process systems are included in the equipment system descriptions in Section 2.

Item	Parameter	Criteria	Notes
1	Vendor Packaged Systems	• Preliminary vendor supplied screens shall be provided to the City for approval before final screen development	
2	Level of Automation	• Fully automated such that, as far as practical, all day-to-day operational adjustments and reporting can be conducted from the SCADA screens • Provide sufficient automation such that critical processes can be controlled remotely	The plant will be staffed 40 hours per week and will be operated remotely on nights and weekends
3	Network Communications Alarms	Failure of Ethernet switches, PLCs, or any network communications shall be alarmed	
4	Local Control	• Local manual override shall be accomplished with a hard-wired	

		switch except where personnel, equipment or the process are protected by equipment software interlocks that need to be maintained at all times. • The system shall not be able to create a safety issue for the local operator. For example, do not allow remote operation if local manual override is selected. • Automatically indicate on SCADA screens when a device in automatic or local control.	
5	Startup/Shutdown	• Shutdown of the Plant units shall be fully automated • Recovery after a power outage or shutdown shall be mostly automatic, but shall require operator intervention in order for the process to begin, and may require additional operator intervention through the startup sequence as determined during the plant design in order to ensure safety and compliance requirements are met	
6	Control Locations	• Allow the automatic and manual operation of the new system from the Operator Workstations and from wireless tablet devices • Additional remote-control access may be incorporated during the Transitional Operation period, with limited secure control access, subject to approval by the City	Coordinate operator privileges with login program
7	Downtime	Minimize the down time due to monitoring and control component failure	
8	Future	• Use the latest available technology to efficiently and responsibly ensure ease of expansion or modification in the future as requirements change • Allow bandwidth in the control system infrastructure for future monitoring, control and diagnostics	
9	Power Monitoring	Monitor and alarm standby power and alternative power (solar)	

9.5.2 SCADA HMI

Item	Parameter	Criteria	Notes
1	Scope and Type	Refer to section "Plant Architecture & Software"	
2	Integration	• Submit written control descriptions and sample control screens for City approval prior to integration •	City shall have option to attend factory performance testing at their cost.
3	Standards	New HMI screens shall be developed following City SCADA standards	
4	Analog Signal Monitoring	• All analog and discrete inputs to the PLC shall be displayed on the SCADA screens • Real-time and historical trending for all analog inputs to the PLC shall be available from the local screens	
5	Alarm Hierarchy	• A hierarchy of alarms shall be specified, which shall be adjustable by the operators. • Each alarm shall be classified with a corresponding value representing criticality. The system shall present the alarms in different ways based on the criticality, per City SCADA standards.	
6	Alarms	• All alarm functions shall be carried out at the PLC level. • All alarms shall display on a common alarm screen. • All alarms must be acknowledged by the Plant operating staff before they can be cleared. • Some alarms may be cleared from SCADA. Others shall need local reset. Philosophy shall be based on safety and equipment protection. • No alarm shall clear automatically until it has been properly acknowledged.	
7	Alarm/Interlock Effect on MANUAL/AUTO Control	• Equipment safety interlocks specified to shutdown equipment "independent of control mode" or other like description shall be active regardless of PLC (MANUAL/AUTO) or field control	

		station (ON, LOCAL/REMOTE) operating status • Other software generated alarms shall remain active independent of operating mode, but only effect specified control actions in AUTO (PLC) and REMOTE (field) operating modes	
8	Equipment Monitoring	• For all equipment controlled by the PLC, the equipment shall receive and display applicable status and alarm signals, such as operating mode (LOCAL, REMOTE, etc.), operating status (ON, OPEN, CLOSED, etc.) and alarm status (FAIL, LOCKED-OUT, etc.). • For multistate devices where an actual digital input is not provided, provide PLC logic based on the status of the other inputs to develop the remaining status. For example, for LOR switches use the status of the LOCAL and REMOTE inputs to develop and display the status of the OFF position.	
9	SCADA AUTO/MANUAL	For all equipment controlled by the PLC, DB shall provide separate displays and poke points for selection of AUTO/MANUAL operating modes. In AUTO mode, the device shall be controlled by the PLC. In MANUAL mode, the device shall be operated by START/STOP, OPEN/CLOSE poke points, as appropriate. The workstation shall display the current operating status of each device and an alarm if the equipment fails to respond to a command signal after an operator adjustable time period.	
10	Proportional, Integral, Derivative (PID) Control	• PID control functions shall be performed at the PLC with controller faceplate displays at the workstation • Standard PID control operator interface shall be provided, including AUTO/ MANUAL mode selection: o In AUTO, the controller output shall be based on	

		the PID control function at the PLC o In MANUAL, the output of the controller shall be based on an operator set value o Transfer between MANUAL and AUTO shall be bumpless o At the workstation, DB shall provide AUTO/MANUAL selection poke points for PID controlled equipment, with graphic loading displays for manual control • PID loop tuning parameters shall be available via SCADA, but shall require engineering login to make adjustments	
11	Enclosures	• All cabinetry located outdoors should be fully enclosed, no false fronts or HMI on outside doors • Any internal equipment requiring regular maintenance shall be out of arc flash area	

9.5.3 Typical Monitoring and Control

Item	Parameter	Criteria	Notes
1	All Analog Transmitters	Transmitter fail alarm	
2	Level Transmitters	• Continuous level monitoring • PLC calculated high/low level alarm • PLC calculated high-high/low-low level alarm	
3	Level Switches	• High/ low level alarms • High-high/low-low level alarms	
4	Flow Transmitters	• Continuous flow monitoring • PLC calculated flow totals • PLC calculated high/low flow alarms	
5	Flow Switches	Flow alarms where applicable	
6	Pressure Transmitters	• Continuous pressure monitoring • PLC calculated high/low pressure alarms	

7	Analyzers (pH/LEL/H2S/CL2/DO etc.)	• Continuous signal monitoring • Dry contact high/low level alarm • PLC calculated high-high/low-low level alarm	
8	Temperature Transmitters	• Continuous temperature indication • PLC calculated high/low temperature alarm	
9	Temperature Switches	• High temperature alarm • Low temperature alarm	
10	Open/Close Valve or Gate	• Valve open/close command • Valve open/close position indication • Valve in Auto or Remote indication • Valve fault indication	
11	Modulating Flow Control Valve	• Valve position set point • Valve position feedback • Valve open/close position indication if applicable • Valve fault indication	
12	Constant Speed Drive	• Drive start/stop command • Drive running indication • Drive in auto or remote indication • Drive faulted: General Fault or Multiple Fault Indicators, etc. • PLC calculated drive run time • Failure to respond to command or change of status when not commanded • Diagnostics, DB to confirm specific parameters	
13	Variable Speed Drive	• VFD start/stop command • VFD running indication • VFD in auto indication • VFD faulted • VFD speed set point • VFD speed feedback • PLC calculated VFD run time • Diagnostics, DB to confirm specific parameters	
14	Chemical Dosing/Feed System	• Chemical dosing/feed systems • Chemical volume/quantity used calculated values	

9.5.4 Labeling

Item	Parameter	Criteria	Notes
1	Equipment Labeling	Submit comprehensive labeling schedule indicating tag information, type, material of	

		construction, manufacturer, and other critical information	

SECTION 10 MECHANICAL HVAC CRITERIA

10.1 General

The following section includes the performance criteria for the mechanical HVAC systems for the WRF. Coordinate these requirements with Section 9.

10.1.1 Code Requirements

All work shall conform to the requirements of the latest edition of the following codes:

Item	Parameter	Criteria	Notes
1	Building	California Building Code (CBC)	
2	Mechanical	California Mechanical Code (CMC)	
3	Energy	California Energy Code (CEnC)	
4	Fire	California Fire Code (CFC)	
5	Ventilation	NFPA 820	

10.1.2 Referenced Standards

All work shall comply with the latest edition of the referenced standards from the following organizations:

Item	Parameter	Criteria	Notes
1	Organizations	• Air Conditioning, Heating, and Refrigeration Institute (AHRI) • Air Moving and Conditioning Association (AMCA) • American National Standards Institute (ANSI) • American Society of Heating, Refrigerating and Air Conditioning Engineers, Inc. (ASHRAE) • American Society of Mechanical Engineers (ASME) • American Society for Testing Materials (ASTM) • American Welding Society (AWS) • Associated Air Balance Council (AABC) • Manufacturer's Standardization Society (MSS) • National Electrical Manufacturers Association (NEMA).	

		• National Fire Protection Association (NFPA) • Sheet Metal and Air Conditioning Contractors National Association (SMACNA) • Underwriters Laboratories, Inc. (UL)	

10.1.3 Installation Requirements

Conform to the manufacturers' installation requirements for materials and equipment furnished.

10.1.4 Design Criteria - Temperature

Item	Parameter	Criteria	Notes
1	Outdoor Design Temperatures	• Buildings containing WRF processes or equipment: o Summer: 88/65 degrees F dry bulb/wet bulb o Winter: 31 degrees F • Operations Building and Maintenance Building: o Summer: 82/64 degrees F dry bulb/wet bulb o Winter: 31 degrees F • Electrical building, electrical rooms, and server room: o Summer: 95/63 degrees F dry bulb/wet bulb o Winter: 31 degrees F	Confirm requirements and conform to ASHRAE standards
2	Indoor Design Temperatures	• Buildings containing WRF processes or equipment: o Cooling: design outdoor temperature plus 10 degrees F • Operations Building and Maintenance Building (non-shop and storage areas): o Cooling: 70 to 78 degrees F and 20 to 60% relative humidity [Design Development] o Heating: 65 to 72 degrees F and 20 to 60% relative humidity [Design Development] • Maintenance Building Shop and Storage Area: o 60 degrees F minimum	

		• Electrical building and electrical rooms: o 90 degrees F maximum [Design Development] • Server Room: o 68 to 74 degrees F dry bulb and 40 to 60% relative humidity	

10.1.5 Design Criteria - Ventilation

Item	Parameter	Criteria	Notes
1	Buildings Containing WRF Processes or Equipment	Supply air and exhaust air ventilation in accordance with NFPA 820, latest edition	
2	Operations Building and Maintenance Building	• Outdoor air ventilation in accordance with the 2016 CEnC and ASHRAE 62 • Exhaust air ventilation in accordance with 2016 CMC and ASHRAE 62, minimum 10 air changes per hour • Provide a minimum of 6 air changes per hour for tanks, channels, and/or within process enclosures	
3	Electrical Building, Electrical Rooms, and Server Room	Outdoor air ventilation sufficient to maintain the spaces at a positive differential pressure of 0.1 inches water column relative to ambient	

10.1.6 Configuration of Systems

Item	Parameter	Criteria	Notes
1	Buildings Containing WRF Processes or Equipment	HVAC systems serving buildings containing WRF processes or equipment shall provide sufficient ventilation to achieve the lowest electrical hazardous location classification indicated in NFPA 820. Centrifugal fans and air cleaning devices should be used for ventilation. Multiple fans shall be employed.	
2	Operations Building and Maintenance	Rooftop package air conditioning (AC) units, power ventilators, and air cleaning devices should be used for HVAC systems.	Minimum four AC units

	Building: Non-Shop and Storage Areas	Split systems or other types of systems may also be considered.	
3	Maintenance Building Shop and Storage Area: 60 degrees F minimum	Power ventilators and air cleaning devices should be used	
4	Electrical Building and Electrical Rooms	Split system air conditioner, (100% redundant), power ventilators, and air cleaning devices should be used for HVAC systems	
5	Server Room	Split system air conditioner, (100% redundant), power ventilator, and air cleaning devices should be used for HVAC system	

10.2 Basic Mechanical HVAC Work

Item	Parameter	Criteria	Notes
1	Listing	All equipment, devices, and control panels furnished as part of this work shall be listed, labeled, or certified for the intended use by a Nationally Recognized Testing Laboratory as recognized by the United States Department of Labor, Occupational Safety, and Health Administration	
2	Motors	All motors shall conform to NEMA Standards MG 1	
3	Supports and Anchors	Pipe supports and anchors shall conform to the requirements of MSS SP-58, SP-69, and SP-89	
4	Identification	All piping, valves, ductwork, and equipment shall be label in accordance with ANSI A13.1	
5	Insulation	Insulate refrigerant piping, condensate drain piping within buildings, and supply and return ductwork	
6	Access	Provide permanent access via ladders or stairs for all equipment	

10.3 Fuel Storage for Emergency Generator

Item	Parameter	Criteria	Notes
1	Fuel Type	Diesel	
2	Volume	Sufficient for 24 hours of generator operation	

10.4 Mechanical HVAC Equipment

Item	Parameter	Criteria	Notes
1	Rooftop Package Air Conditioning Units	Unit shall be outdoor type, rooftop mounted, electrically controlled, cooling unit utilizing a hermetic scroll compressor and gas heating. Unit shall use R-410A refrigerant. Unit shall meet ASHRAE 90.1 minimum efficiency requirements, be rated in accordance with AHRI Standards 210/240 and 340/360, be designed to conform to ASHRAE 15, 2001, and be UL-tested and certified in accordance with ANSI Z21.47 Standards and UL-listed. Roof curb shall be designed to conform to NRCA Standards. Unit shall be designed in accordance with UL Standard 1995, including tested to withstand rain. High efficient motors shall meet section 313 of the Energy Independence and Security Act of 2007 (EISA 2007). Interior cabinet surfaces of evaporator compartment shall be insulated with a minimum 1/2 inch thick, minimum 1-1/2 lb. density, flexible fiberglass insulation. Controls shall be complete with self-contained low-voltage control circuit protected by a resettable circuit breaker on the 24V transformer side. Safeties shall include compressor over-temperature and over-current and low-pressure switch, and high-pressure switch. Unit shall use 2-inch disposable filter. Unit shall be furnished with enthalpy economizer, barometric relief dampers, and hinged access panels.	
2	Split System Air Conditioning Units	Indoor Unit: Unit includes a chassis, coil, insulation, drain pan assembly, fan, and motor. Unit shall be horizontal, ductless, indoor system with field-installed condensate pump, automatic fan speed control, auto restart after power outage, self-check function, and integral diagnostics. Cabinet is heavy gauge with formed edges and access panels. Cooling coils shall be copper tube with aluminum fins and copper tube connections. All coils shall be burst tested at 450 psig air pressure and leak tested at 100 psig air pressure under water. The maximum working pressure shall be 300 psig. Fan wheel shall be centrifugal forward curved double width. Fan wheel and housing shall be formed material and corrosion resistant. Fan speed control is automatic. Motors shall be brushless, permanently lubricated, have characteristics as scheduled, and be furnished with integral thermal overload protection. Motors shall be factory run tested and assembled prior to shipping. Controls shall be wall-mounted wireless. Outdoor Unit includes chassis, coil, compressor, refrigerant piping, condenser fan and motor, and controls. Cabinet is heavy	

		gauge galvanized steel with formed edges and access openings for piping and conduit. Compressor is twin rotor with inverter drive. Refrigerant type is R410A. Piping connections are flared. Controls include automatic condenser fan speed control, auto restart after power outage, self-check function, integrated diagnostics, anti-recycle timer, defrost, and low-ambient lock out.	
3	Centrifugal Fans	Fans for ventilation systems serving hazardous areas classified under provisions of Article 500 of NFPA 70 shall be fabricated in accordance with AMCA Type A or Type B spark-resistant construction. Provide centrifugal vent sets. Fan shall be manufactured in an ISO 9001 certified facility. Fan shall be listed by Underwriters Laboratories in conformance with UL 705. Fan shall bear the AMCA Certified Ratings Seal for Sound and Air Performance. The housing shall be able to be rotated in the field to eight discharge positions. Construction shall be bolted and welded utilizing corrosion resistant fasteners. Bearing support shall be 10-gauge welded steel. Fan shall include a weather cover with latched side access inspection ports for the motor compartment. Provide an engrave nameplate indicating fan performance and model number.	
4	Power and Gravity Ventilators	Spun aluminum housing, roof-mounted, belt-driven, upblast centrifugal exhaust ventilator. Fan shall be manufactured in an ISO 9001 certified facility. Fan shall be listed by Underwriters Laboratories in conformance with UL 705. Fan shall bear the AMCA Certified Ratings Seal for Sound and Air Performance. Gravity ventilator shall have spun aluminum housing similar to exhaust ventilator.	
5	Air Cleaning Devices	Factory fabricated, replaceable, dry, pleated air filters in the, minimum 2" thick, minimum MERV 8 in accordance with ASHRAE Test Standard 52.2-2007. Filters shall be listed as UL 900. Factory-assembled side servicing housings with flanges for insertion into ductwork. Construct of 16-gauge galvanized steel. Provide access doors with continuous gasketing.	

10.5 Ductwork and Appurtenances

Item	Parameter	Criteria	Notes
1	Ductwork	• Construct rigid ducts using ASTM A653M-2003 G90 sheet metal in accordance with recommendations of the ASHRAE Guide, SMACNA	

		1985 HVAC Duct Construction Standards Metal and Flexible, NFPA 90A, and the California Mechanical Code. Flexible ducts with an exterior reinforced vapor barrier, minimum R = 8.0 insulation, encapsulated steel wire helix, and impervious, smooth, non-perforated interior polymer liner. The maximum length shall be seven feet. Flexible ducts shall be limited to use at the terminal ends of the duct system only. Flexible ducts shall conform to UL-181. • Ducts for odor control ventilation shall be FRP.	
2	Ductwork Accessories	Round ducts and rectangular ducts with maximum dimension 16” or smaller shall have butterfly type balancing damper with quadrant locks, fabricated according to SMACNA standards. Rectangular ducts with maximum dimension greater than or equal to 17” shall have opposed blade configuration with quadrant locks. Provide flexible connections and sunshields (if outdoor) for each duct connection to a piece of equipment.	
3	Air Outlets and Inlets	Construct with steel backpans and removable perforated steel faces, and compatible with the ceiling system in which installed. Diffusers shall be equipped with four cores consisting of pattern control vanes that individually pivot to adjust air pattern from horizontal to vertical. The air pattern can be adjusted further by rotating the cores in the field to provide a 1-way, 2-way, 3-way, or 4-way air pattern. Provide volume dampers in the necks of the devices.	Provide plastic materials in corrosive areas

10.6 Mechanical Controls and Monitoring

Item	Parameter	Criteria	Notes
1	Controls	Controls shall be based on digital equipment and shall monitor and control space temperature and/or space humidity	

		to maintain indoor temperatures within the ranges established in the design criteria.	
2	Setpoints	Setpoints shall be adjustable by occupants but shall be limited within a range determined by the City	
3	Monitoring	All continuously operating ventilation systems serving WRF processes shall include flow detector devices connected to alarm signaling systems to indicate inadequate ventilation and ventilation system failure. The flow detection devices shall monitor both the supply and exhaust fans. Distinct local and remote alarms shall be provided in accordance with NFPA 820.	

10.7 Startup, Commissioning, and Testing

Item	Parameter	Criteria	Notes
1	Startup	Startup for all equipment addressed by this section is required. Startup shall be performed by factory trained technicians and shall address all requirements in the manufacturers' installation and startup documentation.	
2	Commissioning	Commissioning is required for all HVAC systems addressed by this section. Requirements for system commissioning shall be based on the guidelines established by ASHRAE 202-2013.	
3	Testing	Testing required by codes, referenced standards, and installation instructions shall be performed in accordance with those requirements	
4	Testing, Adjusting, and Balancing	Testing, adjusting, and balancing of all equipment and HVAC systems addressed by this section is required. Work shall be in accordance with the 7th Edition of the AABC National Standards for Total System Balance and the requirements of ASHRAE Standard 111-2008 (RA 2017).	

SECTION 11 DEMOLITION AND REMOVAL OF EXISTING WWTP

11.1 General – Demolition of Existing WWTP will be performed by other and this option is removed from the contract.

[clarification]

SECTION 12 FACILITY STARTUP AND COMMISSIONING AND TRANSFER OF OPERATIONS

12.1 General

Equipment testing and startup are required for satisfactory completion of the construction phase of the contract and therefore shall be completed prior to operation of the facility.

12.2 Definitions

For purposes of facility startup and commissioning, the following definitions shall apply:

- *Manufacturer's Representative*: Employee of manufacturer who is factory trained and knowledgeable in the technical aspects of the products and systems.
- *Functional Testing*: Tests necessary to demonstrate that the installed equipment and systems function as specified and operate in the manner intended.
- *Startup Period*: Startup of any portion of the entire facility will be considered complete when the facility or designated portion has properly operated 2 weeks without interruption. This period is in addition to any specified functional or performance testing and training.
- *Acceptance Testing*: The operation of the entire facility to demonstrate the successful operation and integration of all the elements including ancillary systems.
- *Performance and Operation Testing:* The operation of the entire facility to demonstrate the facility's ability to meet performance requirements of the RFP, design documents generated by the DB, and finally to verify the performance guarantees submitted by the DB.

12.3 Facility Testing Plan

The DB shall organize and conduct a meeting to coordinate the development of the factory acceptance tests, manufacturers installation certification, functional tests, performance testing, and 6-month operational verification plan. The meeting must have participation from manufacturers' representatives, the City, and DB. After the planning meeting but no later than 3 months prior to the acceptance testing, the DB shall submit a draft Facility Testing Plan to the City. The Facility Testing Plan shall include the Functional Testing plan, the Acceptance Testing plan, and the Performance and Operation Testing plan. All permit-required confirmation testing shall be done by a third-party ELAP certified lab, to be paid for by the DB during the acceptance testing period. The DB shall submit the results of each testing program.

All testing plans and protocols shall define the procedures to be used, methods to verify compliance with the performance criteria, and include the following minimum components:

- The specific measurements that will be made, including identification of permanent and temporary measurement devices
- Calibration procedures for measuring devices
- Redundancy of any measuring device to demonstrate accuracy
- Organization of the testing team, including responsibilities
- The testing program and schedule
- Operations and maintenance schedule during the test period
- Specific detailed sampling protocols to be used in conducting the acceptance test

- Include testing plan to conduct all necessary facility and system performance tests to meet DDW and Title 22 testing and reporting requirements for GRRP's using subsurface application
- The quantities of influent that will be used and selected equipment that will demonstrate the capability of equipment to handle the design flows

12.4 Functional Testing

- The DB shall furnish the services of a manufacturer's representative for each piece of major equipment, to inspect, to check, and to adjust, if necessary, the equipment installation. In each case, the DB shall arrange to have the manufacturer's representative revisit the project site as often as necessary until any issues have been corrected, and the equipment installation and operation is acceptable to the manufacturer's representative. The DB shall conduct, with the assistance of the manufacturer's representative, startup and field tests on equipment, systems, and subsystems.
- Functional testing shall be required for all mechanically or electrically operated equipment and process systems, including but not limited to mechanical, electrical, instrumentation, and controls. Functional testing shall also be required for all control equipment and meters. Testing shall include checking for proper rotation, alignment, speed excessive vibration, quiet operation, and full capability of all other required functions. The DB shall perform initial equipment and system adjustments and calibrations in the presence and with the assistance of the manufacturer's representative.
- The DB shall furnish the manufacturer's representative a written report certifying that the equipment has been properly installed and lubricated, is in accurate alignment, is free from any undue stress imposed by connecting piping or anchor bolts, and has been operated satisfactorily under full-load conditions.
- The DB shall schedule all manufacturer certification testing. The manufacturer's representative and the operating personnel and the owner's representative will witness manufacturer certification testing.

12.5 Acceptance Testing

- The acceptance test shall demonstrate the ability of the WRF to meet contract requirements.
- After all certification, functional and equipment tests have been performed and all equipment has successfully met startup requirements, the facility shall be operated as a complete system for two weeks prior to entering the Transitional Operation Phase.
- The acceptance test shall not be conducted until the acceptance test plan is approved by the City and Regulatory agencies, and authorization is received from the City. The acceptance test plan shall describe the provisions for disposal of non-compliant effluent that may be generated during the execution of the acceptance test.
- All labor (excluding certified operators), materials, and equipment necessary to perform the acceptance test shall be provided by the FBV. Once the facility is treating wastewater, the City will provide certified operators. During the acceptance test, the FBV will operate, and be responsible for all costs for all systems under normal operating conditions, including but not limited to, routine equipment operation, maintenance services. Electricity and Chemical costs [PCO 119] will be paid by the City.
- The acceptance test shall also demonstrate the WRF's ability to operate on the emergency generator, in the event of total plant power failure, including automatic transfer to the emergency

generator. The system should demonstrate that the quality of effluent, and capability to process the influent is not diminished due to an automatic transfer to the emergency generator.

- The acceptance test should demonstrate the UPS for power and controls performing without loss of data and control.
- The acceptance test shall demonstrate manual shutdown, manual start-up, automatic shutdown, automatic start-up, and automatic transfer of equipment that requires any or all of those functions, without interruption of flow, or quality of effluent.
- Acceptance test shall include all necessary facility and system performance tests to meet DDW and Title 22 testing and reporting requirements for the Advanced Water Purification Facility to be employed to achieve Groundwater recharge through subsurface application. The scope of the Acceptance Testing shall be limited to the performance of the AWPF unit operations to produce a water quality set forth in Section 1.6.2. See Attachment 4 for further clarification. [PCO 89]
- The City operational staff and owner's representative will witness acceptance testing. The City will provide at least one operator for eight hours per day, during the acceptance test period.
- The DB shall provide reports in accordance with the requirements of the regulatory agencies, with certification of the results demonstrating performance, all relevant data measured and recorded during the testing, and any calculations that were used in determining test results, and any certifications from equipment manufacturers that equipment was operated according to manufacturer's recommendations, any other available documentation reasonably requested by the City or regulatory agencies.
- DB shall provide initial oil fill and first oil change on all equipment as required by manufacturers' recommendations prior to the facility transfer to City for Performance and Operation Testing.

12.6 Performance and Operation Testing

- Following completion of acceptance testing, the City shall operate the facility for the 30 days as the Performance and Operational Testing period. During this period, the facility will be operated by the City under the direction of the FBV. Following this 30-day period, the City, FBV, and owner's representative shall meet to discuss the operation of the facility and evaluate the Performance. If at the conclusion of this meeting the City determines additional testing, optimization or monitoring is required they may request additional services from the Design Builder for up to an additional six month period. The cost and scope of these services will be agreed to by both parties and added to the contract via amendment.
- The performance and operations testing will be conducted by the City in accordance with the approved performance and operations plan.
- All labor, materials, and equipment necessary for the Performance and Operational Testing period shall be provided by the City. During the Performance and Operational Testing period the City is responsible for all costs for all systems under normal operating conditions, including but not limited to routine equipment operation, maintenance services, analytical costs, and chemical and electric usage. During performance and operation testing FBV will be responsible for all warranty repairs. FBV is responsible for any costs associated with permit violations.
- [PCO 064]

SECTION 13 SECURITY

13.1 General

Provide a security system that gives the City the ability to remotely monitor key areas within the site and notify the City of any intrusions. The completed security system shall be integrated with the City's SCADA system.

Item	Parameter	Criteria	Notes
1	Construction/Work Area	Make adequate provision for the protection of the work area against fire, theft, and vandalism, and for the protection of the public against exposure to injury	
2	General Design Principles	• Discrete security measures shall be planned into the facility • Site design shall address security issues related to access control; electronic protection; and protection against man-made and natural disasters • Security measures shall be consistent with Department of Homeland Security (DHS) Best Management Practices (BMPs)	
3	Security Measures	Intrusion detection, access control and CCTV video surveillance system security zoning shall provide a defensible perimeter and provide visual surveillance and defensible perimeter space to deter trespassing and vandalism	Do not monitor perimeter fence integrity i.e. cut wire or short circuit detection
4	Intrusion Detection System (IDS)	• An IDS shall be provided. IDS field devices shall be connected to alarm panel. Alarm signals shall be relayed and integrated with SCADA system. • Provide IDS devises on all exterior doors on Operations and Maintenance Buildings. • Provide motion detectors on interior of Operations and Maintenance Buildings. • Provide IDS with capability of assigning unique staff identification numbers and logging time and individual staff input to IDS system. Provide ability to activate and inactivate unique staff IDs.	

		• Add one exterior security camera to enhance coverage of the facility grounds (6 other cameras already in design), add door detectors and motion sensors at the RO Bldg, Storage Shed, Electrical Bldg (detectors and sensors at Ops Bldg and Maint Bldg are already in design). [PCO 94]	
5	Access Control System (ACS)	• An ACS at the gate to the non-public portions of the plant shall be comprised of an electrically operated vehicle gate, the gate shall be operated by contactless badges, and hardwired gate opener switch at the reception desk. Exiting vehicles shall trigger the gate to open automatically. • Automatic Security Gates shall be equipped with pre-emptive equipment. This shall satisfy the following conditions: • During power loss, the device shall be capable of manual operation to unlock and open the gates. • Confirm device is suitable with local Fire Department.	Fire Department access and keypad entry station shall be available at the gate for entry.
6	Closed Circuit Television (CCTV)	• CCTV security cameras for main front gate access and site security purposes. • The system shall include weatherproof high-resolution IP or panoramic video cameras. • The video surveillance system shall provide recording capacity of 30 days. • The system shall have night vision capability and utilize video motion detection for alarm recording. Video motion detection events shall be recorded at full speed and camera resolution. • The video surveillance system shall be available through the SCADA network. • Provide video surveillance at critical points throughout the plant.	

7	Battery Backup & UPS	• All electronic security systems shall be powered from an UPS/generator supported power circuit(s) • IDS and ACS systems shall have power supplies with minimum of 8 hours of battery power backup • Video surveillance system shall be supported with UPS system with a minimum of 2-hour run time	
8	Supervisory Control and Data Acquisition (SCADA) Integration	• The SCADA system shall incorporate intrusion detection alarms from following electronic security systems: o Main Gate o Operations Building o Maintenance Building o Space Motion Detection	
9	Main Access Gate	Main gate to the plant shall be manually operated and locked with a padlock. Coordinate manual access and entry with Emergency Services.	
10	Exterior Lighting	All exterior lighting shall be SCADA controllable (on-off times)	

SECTION 14 DELIVERABLES

The following table (edited version of Exhibit E of the RFP) defines the deliverables expected during the project.

Submittals Required	Due Date
Functional Relationships	N/A [Per 3/27/19 Meeting]
Health and Safety Plan (Including IIPP)	30 Days Prior to Construction NTP
Data and Document Management Plan[1]	30 Days After Design NTP
Design QA/QC Plan	30 Days After Design NTP
Design Management Plan[1]	30 Days After Design NTP
Environmental Management Plan	30 Days Prior to Construction NTP
Construction QA/QC Plan	30 Days Prior to Construction NTP
Design Builders Construction Management Plan	30 Days Prior to Construction NTP
Preliminary Baseline Schedule	14 days after Design NTP
Baseline Schedule	60 days after Design NTP
Weekly Reports	Weekly throughout the Construction Contract duration [Per 3/27/19 Meeting]
Monthly Report, Baseline schedule update, Certified Payroll, Pay Application and California Civil Code 8122 waivers and release forms	Monthly
3-week Look-ahead Schedule	Weekly during active construction
UV Validation Testing Plan	6 months prior to testing
UV Validation Test Results	1 month after test
All Testing Plans and Submittals per Title 22 and DDW	As required by permitting agencies
Certified Payroll	Per DIR, state and federal funding standards
Subcontractor Advertisement/Bid Results	As required in Funding Agency Documents

Basis of Design (30%)	**Per Schedule**
Code Analysis[2]: Submittal shall consist of an outline of applicable provisions of building codes, Regional and State Water Quality Control Board, Fire Department, and other codes. The outline shall include a written report and diagrammatic drawings which delineate the design criteria as appropriate.	
Architectural Design Themes – N/A [Per 3/27/19 Meeting]	
Schematic Design Report: Report detailing the review and analysis of each building and process component or treatment processes. Based on the Design Criteria Report, RFP requirements, and submitted proposal, with description of proposed changes, improvements, and/or additional requirements. Provide equipment cut sheets for critical equipment, and include preliminary design details for each discipline. This report shall include design flow rates and loadings, energy consumptions, chemical uses, operational and maintenance costs. Design report shall also include updated cost estimates for entire project.	
Civil Drawings: Site Plan showing locations of treatment facilities, buildings, structures, and access roadways and pedestrian pathways Site Access Road Plan showing road location Grading plans showing existing contours at 1-foot intervals and proposed grading concepts to a level sufficient to illustrate general site drainage and cut and fill areas. Utility Plans showing existing utilities, points-of-connections, and new site utilities	
Landscape Drawings: Plans showing conceptual hardscape and planting areas.	

Architectural Drawings: Overall Facility Dimensions Structure dimensions Major interior and exterior elements Floorplan layout with room names and size Site Sections Basic Elevations
Structural Drawings: N/A [Per 3/27/19 Meeting]
Plumbing Drawings: N/A [Per 3/27/19 Meeting]
HVAC Drawings: N/A [Per 3/27/19 Meeting]
Electrical Drawings: Conceptual single-line diagrams and plans showing site conduit routing, MCC and equipment locations and sizes.

Design Development 60%	**Per schedule**
Code Analysis[2]: Updated analysis from schematic design.	
Civil Drawings: Site Demolition Plan Site Plan showing dimensions of site features Site Access Road Plan showing road location and geometrics Grading plans showing general drainage, benchmarks, elevations for structures and exterior elements, and existing and proposed contours. Utility Plans updated with utilities showing plan and profiles along alignments and utility corridors, ductbanks, all equipment and structures Trench design and protection Miscellaneous Civil Details	
Landscape Drawings: Plans showing locations of plant types and trees	
Material board: Show all exterior, interior, coatings, color pallets, and glazing materials for architectural items	
Architectural Drawings: Updated Floorplans with corridors, door swings, fire ratings, exits, fire doors, plumbing fixtures, built-in features, movable furniture, sections and elevations. Architectural schedules for doors, glazing, finishes Drawings of all buildings, structures and process areas	
Structural Drawings: Structural plans showing structural elements (e.g. framing member sizes, reinforcement details, etc.) and details scaled per architectural drawings	
Plumbing Drawings: Show all piping (including alignments and sizes), fixtures and equipment requiring plumbing, waste lines, vents, air, gas, water, fire water system	
HVAC Drawings: Floor plans with equipment, main duct systems, air balances, large scale equipment room drawings and equipment schedules	
Electrical Drawings: Updated plans from schematic design documents to include MCC layouts with loads, lighting layouts, preliminary arc flash and trip study, equipment locations and sizes. Typical light fixture cut sheets Electrical room drawings Individual MCC detailed single lines	
Controls: PLC and SCADA layouts and block diagrams Equipment and instrument locations Input/output points	

P&ID's
Specification: Complete Technical Specifications per the outline. Specification must include construction guidelines, sequencing, construction materials, equipment specifications, submittal requirements, and test requirements. [Per 3/27/19 Meeting]

Construction Documents 90%	30 Days prior to permit submittals (for Owner review)
Code Analysis[2]: Updated analysis from Design Development	
Civil Drawings: Finalized plans from the Design Development Phase Site Survey and Control Plan Final Utilities Plan that: • Are coordinated with Architectural, Mechanical, Plumbing, Electrical, etc.; • Show manholes, valves, valve boxes, cleanouts, lift stations, process structures, etc.; • Include fully designed process piping horizontal and vertical locations and sizes; and • Show location, size, and elevations of all utilities.	
Landscape Drawings: To be provided as a separate submittal.	
Material Board: Show all finalized exterior, interior, coatings, color pallets, and glazing materials for architectural items	
Architectural Drawings: Reflected Ceiling plans, details	
Structural Drawings: Plans that indicate the location, type of member, size, and material of each structural element for foundations, floors, roofs, and any intermediate levels. List assumed safe bearing pressures on soils and ultimate strengths of concrete. Schedules (beam, column, and slab) Details of all connections, assemblies, expansion joints, and similar items Structural framing systems for piping, nonstructural elements and fixed equipment	
Plumbing Drawings: Floor plans showing complete process and domestic plumbing systems with the following information: • Location sizes, elevations of water, firewater, sewers, drains, waste, waste vents, and process piping with risers and connections to equipment, drains, and fixtures. • Locations of meters, valves, cleanouts, etc. • Fire-extinguishing equipment such as sprinklers and standpipes. • Location and sizes of natural gas, compressed air, process air piping. • Single line process diagram for all process piping • Equipment Schedules	
HVAC Drawings: Mechanical floorplans showing complete HVAC systems including • Air Conditioning systems including refrigerators, water and refrigerant piping, and duct work • Odor Control and Exhaust ventilation systems showing duct sizes, duct locations, condensate, equipment connections and discharge locations • Detailed floor plans and sections for all mechanical rooms and equipment	

- Air balance schedule indicating the CFM of outside air, supply air, return air, odor control air, and exhaust for all air systems
- Elevations of mechanical equipment to ensure airflows and access to component parts
- Equipment mounting details
- Isometric diagrams of HVAC water systems
- Sequence of operations diagram
- Equipment Schedules

Electrical Drawings:

- Transformers and connections
- Feeder and conduit sizes
- Light fixtures, receptacles, switches, and power outlets
- Telephone outlets, conduits, terminal cabinets, and backboards
- Complete fire alarm system including inter connections to SCADA
- Equipment local control panels
- Emergency electrical power system including generator, transfer switches, fuel tanks, and all auxiliaries
- Electrical Details including all mounting details
- Equipment Schedules

Instrumentation and Controls Drawings:

- Instrumentation Remote I/O cabinet details
- Controls Details
- Equipment Schedules

Technical Specifications:
Updated Specifications based on the specifications submitted as part of the Design Development work submittal.

Final Design Calculations
Developer shall clearly list all design criteria, assumptions, and references used for process, structural, mechanical, and electrical calculations. Calculations shall be arranged in a clear manner and shall include schematic diagrams and spreadsheets where necessary together with information sufficient to show compliance with applicable Law and the Contract Documents. Calculations shall be checked and stamped by Licensed Professional in applicable disciplines. Calculations shall be submitted for:

- Structural shall include basis for structural design, unusual conditions, and diagrams
- Mechanical shall include HVAC loads, equipment sizing and selection data, duct/pipe/pump sizing selection data and all seismic/structural calculations
- Plumbing shall include piping/pump/equipment sizing and selection data, and seismic/structural calculations
- Electrical shall include transformer loads and calculations, fault interrupt calculations, and lighting calculations.
- Process calculations shall be performed with the use of an acceptable wastewater treatment computer modeling software program (i.e., BioWin). All system inputs and outputs must be submitted.

Post Design Submittals	
Building Permit Drawing Set	90% Set will be used for permit reviews. However, separate sets may be required as required for early works as defined by Design-Builder. Design-Builder is directed to anticipate and allow for sufficient review, revision and resubmission for building permit approvals.
Misc. Permit Submittal Requirements	All necessary documents necessary to complete design or construction of the project (i.e. Traffic Control, SWPPP)
Pre-Construction site condition record video	10 days prior to start of construction on the WRF
Equipment and Materials	Prior to release for production
Building Furnishings	Prior to release for production
Shop Drawings and Finish Materials	With sufficient time for City review and approval prior to order release
Daily Record of Construction activities	Following Business day 12:00 p.m.
Construction Photos	Monthly within 3 days of pay application
Existing WWTP Shutdown and Decommissioning Plan	Must be submitted 60 days prior to Decommissioning
As-Built Drawings	Prior to Final Completion and Payment
Structural Engineer Observation Certification	Prior to Certificate of Occupancy
Air Balance Report (Air Side Report)	Prior to Final Acceptance
Hazardous and/or Toxic Abatement and Demolition Plan	Prior to Demolition of existing WWTP
Operation and Maintenance Manuals	Prior to Facility Testing
Traffic Control Plans	As required by Agencies
Training Plan	3 months prior to equipment testing
Facility Testing Plan	Minimum 3 months prior to Facility Testing
Facility Verification Plan	Minimum 3 months prior to Facility Testing
UV Validation Test results	30 Days after validation testing
Miscellaneous Certificates of testing and inspection	7 days after testing unless otherwise specified
Facility Test Reports	30 days after Testing
Certificate of Final Completion	After all work and punch list items are completed

Notes:

1. May be combined into a single document, or separate.
2. May be combined into the Basis of Design Report, or separate.

SECTION 15 UNFORESEEN CONDITIONS

15.1 Weather Delays

- Average weather days covered under the yearly NOAA averages will be consider non-compensable. Direct cost impacts to the field above and beyond normal industry standard such as act of god and beyond the NOAA daily average will be resolved separately. [PCO 60]
- Weather damage repairs from a rainstorm event on the Site in January 2021: FBV was reimbursed for actual expenditures associated with the January 2021 major storm (8"+ of precipitation in 48 hours). [PCO 96]

15.2 COVID

The COVID-19 pandemic has caused FBV to incur additional field costs to execute the work. FBV crew worked less efficiently. Additional safety protocol measures recommended by OSHA and State of California were implemented which included a period of daily screenings for temperature, additional sanitation and cleaning services for the field offices and the temporary field toilets and wash stations, safety stand downs, social distancing, COVID testing and lost time for some employees. We have also purchased extra PPE, thermometers, and cleaning supplies and rented additional porta-potties, among other costs. [PCO 77] Covid-19 has also caused certain material costs to escalate. [PCO 101]

15.3 LANDSLIDE

On January 28, 2021, the previous cut-slope landslide area reactivated during a major storm. The DB Team has performed extensive site investigation, and developed preliminary remediation drawings, and submitted total costs in the amount of $825,300 to address the known conditions. The remediation scope of work includes: removal and stockpiling of approximately 17,000 cy of loose material to the mapped slip plane, benching into competent native subgrade material, installing a subdrain system at each bench with drainage to surface, placement and compaction of 17,000+ cy of engineered fill, surface contours to enhance precipitation run-off, concrete v-ditches to divert run-off from the areas, and the installation of two inclinometer for future monitoring by the City (monitoring not included). Future deliverables shall include As-Built IFC Drawings of all site work revisions and a P.E. stamped Geotech Report amendment indicating approval of work performed and updated slope stability analysis. [PCO 92]

15.4 Amendment No 7 Items (Approved by Council August 23, 2022)

In addition to the scope changes in this Exhibit Amendment No 7 also includes compensation for the following PCO's:

PCO	Title
102	City Requested SCADA Screen Revisions
105	WRF Monument Entry Sign Modifications
110	Chem Facility Fencing Revisions
113	Modify H2O SCADA Screen for RO System
114	RO/UV Building Wall & Ceiling Insulation
118	Fine Screen LOTO Capability

15.5 Amendment No 8 Items (Approved by Council November 29, 2022)

In addition to the scope changes in this Exhibit Amendment No 8 also includes compensation for the following PCO's:

PCO	Title
97	Hydroseeding Soil Amendment & Coverage Limits
103	SRF Reimbursement Request Requirements
106	DC-33 Add Wash Rack Grease and Sand Interceptor
107	DC 34 Vactor Unloading Facility Revisions
108	Defer SEED PLANT Milestone and WRF Commission
121	Credit for Alternate Frog Barrier Top Lip.

CITY OF MORRO BAY

AMENDMENT NO. 3 TO THE AGREEMENT
FOR CONSULTANT SERVICES
BETWEEN THE CITY OF MORRO BAY
AND COGSTONE RESOURCE MANAGEMENT

This Amendment No. 3 is entered by and between the City of Morro Bay, a municipal corporation ("City") and Cogstone Resource Management, a California corporation ("Consultant").

RECITALS

WHEREAS, City and Consultant entered into an agreement as of January 12, 2021, for cultural resources monitoring and management services related to the Water Reclamation Facility Lift Station and Offsite Pipelines Project (the "Project"), which was approved by the City Council for a not-to-exceed amount of $264,918 (the "Agreement").

WHEREAS, the Agreement when prepared and signed had a typo showing the not-to-exceed amount was $261,918.40;

WHEREAS, the Parties amended the Agreement as of October 12, 2021, to include additional services and established a not to exceed amount of $740,803.22 for the entire Agreement (Amendment No. 1);

WHEREAS, the Parties amended the Agreement as of August 23, 2022, to include additional services and established a not to exceed amount of $390,270.00 for the entire Agreement (Amendment No. 2);

WHEREAS, the Parties now agree to amend the Agreement to provide for monitoring and project management services for the Project, which work requires an expansion of the tasks to be provided by Consultant pursuant to the Agreement;

WHEREAS, Consultant has specific knowledge and experience to provide technical oversight needed to accomplish necessary tasks required to meet the City Council's goals for the Project, and

WHEREAS, due to the expansion of tasks to be provided, the compensation payable pursuant to the Agreement must be increased.

NOW THEREFORE, City and Consultant mutually agree to amend the Agreement as follows:

1. The additional services to be provided by Consultant, pursuant to the Agreement, as hereby amended, shall include Tasks 1.1, 1.2, 2.1, 2.2, 2.3, and 2.4 of the Scope as set forth in Exhibit A, attached hereto and incorporated herein by this reference (the "Additional Work").

The Additional Work shall be satisfactorily commenced immediately after November 22, 2022, and completed no later than June 30, 2023.

2. The compensation for the Additional Work shall not exceed $97,535.90. All Additional Work and further optional tasks shall be paid in accordance with the hourly rates set forth in Exhibit B, attached hereto and incorporated herein by this reference (the "hourly rates") and the process established by the Agreement on a time and materials basis. With the amount added for satisfactorily completion of the Additional Work and further optional tasks, if all are requested to be performed, the total compensation paid pursuant to the Agreement shall not exceed $1,493,527.12.

3. Except as expressly stated herein, all terms and conditions in the Agreement shall remain in full force and effect.

4. The effective date of this Amendment No. 1 shall be deemed to be November 22, 2022.

IN WITNESS WHEREOF, the parties have caused this Amendment No. 3 to be executed by their duly authorized representatives as of the day first written above.

CITY OF MORRO BAY

By: _____
Scott Collins,
City Manager

Attest:

_____
Dana Swanson, City Clerk

Approved As To Form:

_____
Chris Neumeyer, City Attorney

CONSULTANT

By: _____
_____
Its _____

By: _____
_____
Its _____

01181.0001/743357.1

City of Morro Bay
Water Reclamation Facility Program

QUARTERLY REPORT - ENDING September 30, 2022

FY 2022-2023 – 1st Quarter
July 1 through September 30, 2022

Contents

Executive Summary 1
ES.1 Progress During Q4 FY22 1
ES.2 Budget Status 1
ES.3 Key Q4 FY22 Accomplishments 1
ES.4 Challenges and Upcoming Activities 1
Section 1 – Program Management Summary 2
1.1 Purpose of the Quarterly Progress Report 2
1.2 Program Budget 2
1.3 Cashflow Projections and Actual Expenditures 3
1.4 Program Funding 3
1.5 Program Schedule Overview 4
Section 2 – WRF Project 7
2.1 Construction Progress Summary 7
2.2 Project Photographs 8
2.3 Contract Amendment Summary 9
2.4 Project Schedule 9
Section 3 – Conveyance Facilities Project 11
3.1 Construction Progress Summary 11
3.2 Project Photographs 12
3.3 Change Order Summary 14
3.4 Project Schedule 14
Section 4 – Recycled Water Facilities Project 16
4.1 Project Progress Summary 16
4.2 Project Photographs 17
4.3 Project Schedule 18

Appendices

Appendix A Abbreviations
Appendix B Quarterly Expeditures by Budget Code
Appendix C WRF Program Funding Requests and Reimbursements Status Summary
Appendix D Program Milestones
Appendix E FBV Amendment Details
Appendix F Anvil Amendment Details

Tables

Table 1 WRF Program Budget 2
Table 2 Project Component Contract History 2
Table 3 WRF Program Expenditures 3
Table 4 WRF Program Funding Sources 3
Table 5 WRF Project Contract Amendment Summary 9
Table 6 Conveyance Facilities Contract Amendment Summary 14

Figures

Figure 1	Program Cash Actual and Forecasted Expenditures	5
Figure 2	Program-Wide Summary Schedule	6
Figure 3	WRF Project Component Schedule	10
Figure 4	Conveyance Facilities Project Component Schedule	15
Figure 5	Recycled Water Facilities Project Component Schedule	19

Executive Summary

"Our Water" is the City of Morro Bay's (City's) program to plan and build water and wastewater infrastructure for a sustainable future for the environment, our economy, and the community. This report summarizes key accomplishments and challenges during the first quarter (Q1) of the 2022-23 fiscal year (FY23). It includes information and data on the overall program budget and the status of the individual program components.

ES.1 Progress During Q1 FY23

The Water Reclamation Facility (WRF) is approximately 96.5 percent complete, and Conveyance Facilities are approximately 94.1 percent complete. The WRF is anticipated to be completed and operational by January 2022, which will achieve compliance with the State's Time Schedule Order (TSO) that requires full operation of the WRF by February 2023. The Recycled Water Facilities (RWF) component of the program is approximately 10 percent complete and is anticipated to be completed by Spring 2025. WRF major construction efforts are essentially complete while the Conveyance Facilities construction continued to progress significantly in Q1 FY23. The major accomplishments are summarized below.

ES.2 Budget Status

The current program budget is $159.84M and $119.6M has been spent to-date.

ES.3 Key Q1 FY23 Accomplishments

- The City was awarded a $9.3 million dollar Title XVI grant from the United States Bureau of Reclamation in August.
- Clean water testing and final fine tuning of the WRF was completed, and it is ready for full startup in October.
- Major Conveyance Facilities construction was completed, and final testing is underway for full startup in October.
- The pilot injection well was successfully installed by Pacific Coast Well Drilling in September.

ES.4 Challenges and Upcoming Activities

Major construction of the Conveyance Facilities was completed by the end of the quarter to prepare to pump wastewater to the WRF in early October, which will allow Filanc Black & Veatch (FBV) to start up the WRF's treatment processes and complete the facility in advance of the TSO deadline. The startup and commissioning period for the WRF is expected to take the majority of Q2, and both the WRF and Conveyance Facilities are anticipated to be fully completed in early 2023.

The program team and FBV reached agreement on the value of the delay in Conveyance Facilities completion, and an amendment that includes the delay claim and several outstanding potential change orders (PCOs) will be considered by the City Council at the November 22 meeting. The November 22 meeting will also include an item for Conveyance Facilities changes, and an amendment with Cogstone Resource Management for additional costs related to cultural resource monitoring.

To advance the RWF, injection testing using the pilot injection well will be conducted until the State Water Project (SWP) deliveries temporarily shut down in the beginning of November. Once the SWP is back online, an extended injection testing operation to identify groundwater movement characteristics between the existing monitoring well and the pilot injection well will be conducted to gather information for well design, with construction of the full-scale injection system scheduled to begin in 2024.

Section 1 – Program Management Summary

1.1 Purpose of the Quarterly Progress Report

The WRF program quarterly progress report describes current budget status, funding agency reimbursements, planning/design and construction activities, and project component schedules. Abbreviations used throughout this quarterly progress report are found in Appendix A.

1.2 Program Budget

Table 1 shows the current program budget.

Table 1 WRF Program Budget

Program Component	Baseline(1)	FY 21/22	Prior Quarter	FY 22/23 and Current Quarter(2)	Current % Change from Baseline
WRF Plant	$62,414,000	$77,687,023	$74,697,995	$79,643,216	28%
Conveyance Facilities	$21,087,000	$37,982,000	$37,365,582	$39,774,724	89%
RWF	$8,593,000	$6,668,000	$6,668,000	$9,424,174	10%
General Project	$24,403,000	$15,445,000	$25,362,730	$30,998,235	27%
Construction Contingency	$9,444,000	$6,892,854	$580,570	Note 2	N/A
Total	**$125,941,000**	**$144,674,877**	**$144,674,877**	**$159,840,349**	**27%**

Notes:
(1) Baseline budget established 4th Quarter of Fiscal Year 2017/2018.
(2) The FY 22/23 budget adopted by City Council on June 28, 2022 was $159,840,349. As of current Q1, FY 22/23, Construction and Overall Program Contingency in the FY 22/23 budget is included within each Program Component with remaining breakdowns as follows: WRF $1,690,221, Conveyance $50,475, RWF $304,549, and General Project $923,421.

Table 2 shows the initial and current contract values by project component.

Table 2 Project Component Contract History

Project Component	Contractor	Initial Contract Value	Current Contract Value	% Change
WRF Plant		**$67,234,512**	**$77,057,880**	**15%**
Design/Build	FBV (Overland)	$67,234,512	$77,057,880	15%
Conveyance Facilities		**$33,315,112**	**$39,079,160**	**17%**
Design	Waterworks Engineers	$1,360,565	$2,540,113	87%
Construction (Anvil Builders)	Anvil Builders	$31,493,675	$34,196,581	9%
Permitting	Cogstone, Far Western, KMA	$460,872	$2,342,466	408%
RWF		**$707,625**	**$1,290,275**	**82%**
Planning and Modeling	GSI Solutions, Inc. (GSI)	$351,000	$933,650	166%
Pilot Injection Well Construction	Pacific Coast Well Drillings	$356,625	$356,625	--
Injection Wells Construction	TBD	--	--	--

Project Component	Contractor	Initial Contract Value	Current Contract Value	% Change
General Project		**$293,000**	**$13,930,201**	**4654%**
Program and Construction Management	Carollo Engineers and Subconsultants(1)	$293,000	$13,508,401	4510%
City Contracts	Note 2	Note 2	$421,800	--
Total		**$101,550,249**	**$131,551,002**	--

Notes:
(1) Program management costs include permitting, public outreach, funding support, and construction oversight/management.
(2) Initial City Contract values for previous and/or inactive consultants (such as MKN, Black & Veatch, ESA, and Kestrel) are unknown. Current contract values are shown only for currently active consultants including Bartle Wells Associates, Confluence, and JSP.

1.3 Cashflow Projections and Actual Expenditures

Figure 1 shows cashflow projections and actual expenditures through the current period.

Table 3 lists actual expenditures for each program component and the percent of the budget expended.

Table 3 WRF Program Expenditures

Program Component	Previous Total	Current Quarter(1)	Total To Date	FY 22/23 and Current Quarter Budget(2)	Percent Budget Expended
WRF Plant	$62,741,784	$2,354,846	$65,096,630	$79,643,216	82%
Conveyance Facilities	$28,181,593	$4,766,684	$32,948,277	$39,774,724	83%
RWF	$741,442	$59,563	$801,004	$9,424,174	8%
General Project	$19,673,305	$1,084,553	$20,757,857	$30,998,235	67%
Total	**$111,338,124**	**$8,265,645**	**$119,603,769**	**$159,840,349**	**75%**

Notes:
(1) Q4 FY 21/22 total expenditures as tallied on the Accounts Payable Report run on 7/14/2022, which does not include all invoices paid through June 30, 2022 services (to be included with Q1 FY 22/23 report). See Appendix B Note 2 for additional details.
(2) The FY 22/23 budget adopted by City Council on June 28, 2022 was $159,840,349.

1.4 Program Funding

Table 4 lists WRF program funding sources.

Table 4 WRF Program Funding Sources

Funding Agency	Funding Type	Amount Financed	Initiation Date	Terms
SWRCB – CWSRF Construction Loan	Low interest Loan	$66,604,638	7/1/2021	0.9%, 30 years
EPA – WIFIA	Low Interest Loan	$61,700,336	3/9/2020	0.83%, 35 years
SWRCB – CWSRF Planning Loan	Low Interest Loan	$10,300,000	12/11/2015	0.9%, 30 years
Recycled Water Planning Grant	Grant	$75,000	9/10/2015	Costs reimbursed upon request
	Total	**$138,679,974**		

Abbreviations:
CWRSF - Clean Water State Revolving Fund; EPA - Environmental Protection Agency; SWRCB - State Water Resources Control Board; WIFIA - Water Infrastructure Finance and Innovation Act.

Appendix C provides detailed information on funding reimbursements.

1.5 Program Schedule Overview

In June 2018, the City received a time schedule order (TSO) from the Regional Water Quality Control Board (RWQCB) that requires the City to achieve full operation of the new WRF by February 2023. The key milestones included in the TSO are included in Appendix D, and the overall program schedule is shown in Figure 2. The current construction progress percent complete to-date per contract spent is 96.5 percent for the WRF and 94.1 percent for Conveyance. Figure 2 shows percent complete as an average between contract spent and scheduled date of completion. The RWF does not currently have a construction progress percent complete to-date.

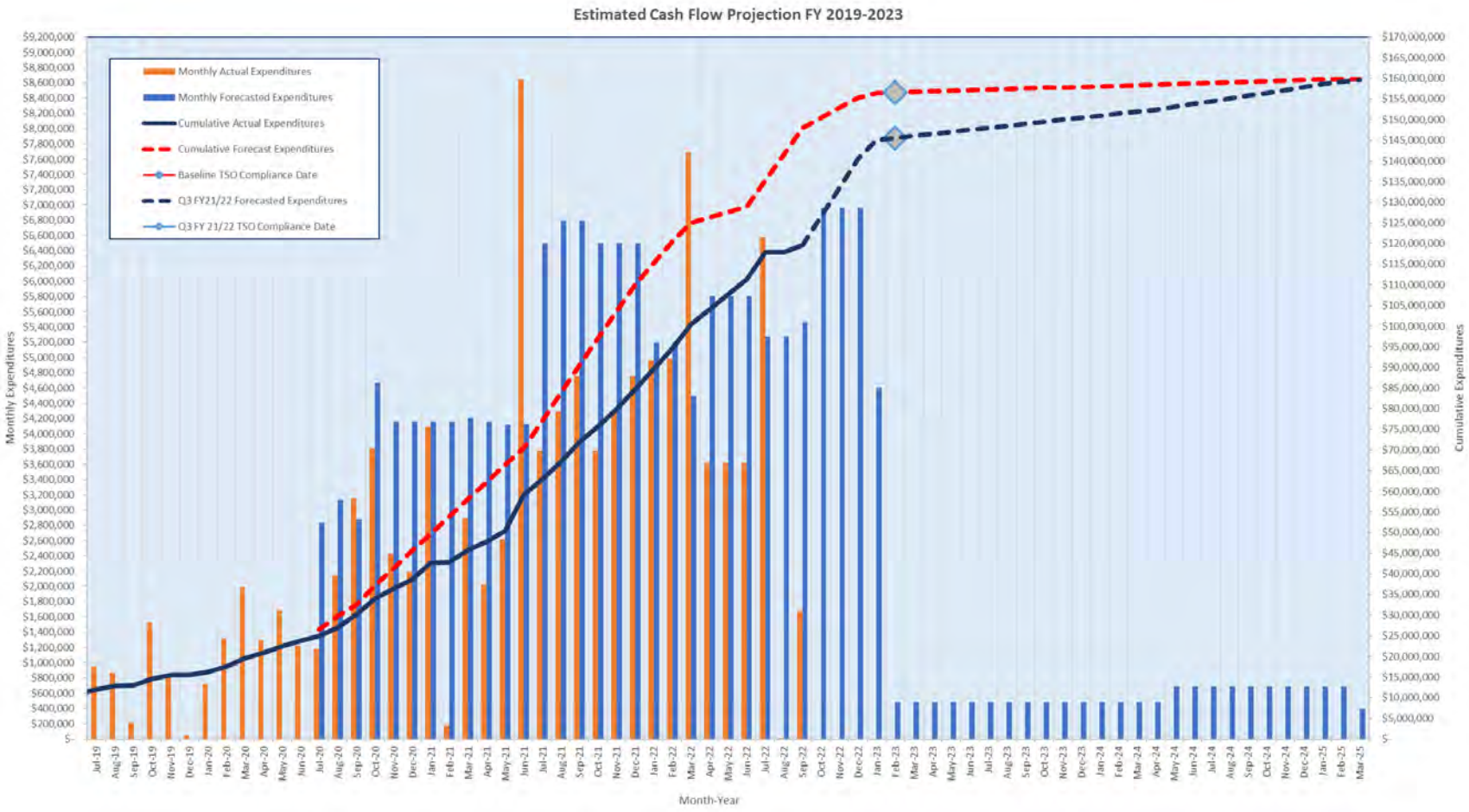

Figure 1 Program Cash Actual and Forecasted Expenditures

MORRO BAY OUR WATER
RELIABLE. CLEAN. FOR LIFE.

Morro Bay WRF Project
Program Wide Schedule Summary
Updated: FY22/23 Q1

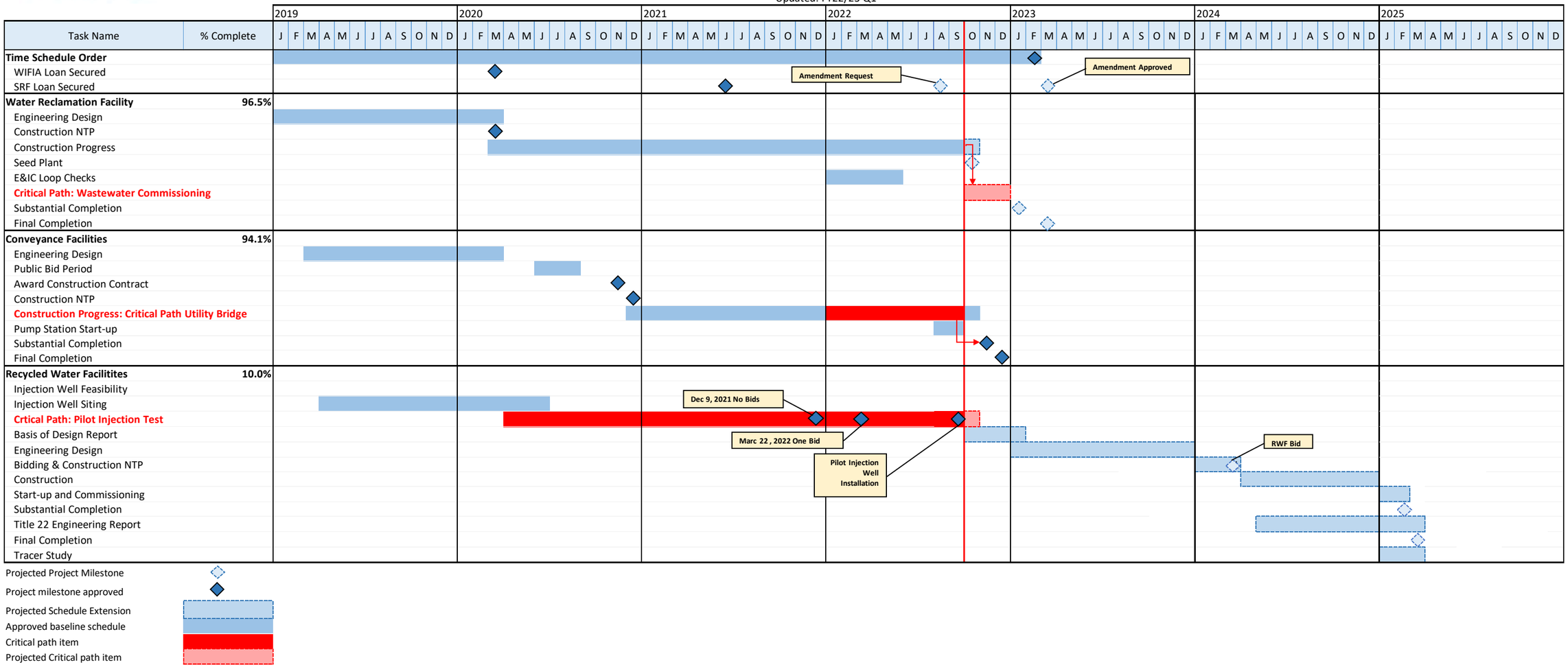

Figure 2 Program-Wide Summary Schedule

Section 2 – WRF Project

2.1 Construction Progress Summary

Major accomplishments during this period are summarized below:

General and Administrative:

- Contractor has now completed pre-commissioning activities including point-to-point loop testing, deployment of SCADA system, equipment vendor site visits, training of city staff, and clean water recirculation testing.
- Contractor continues equipment Submittals and Requests for Information:
  - Submittal processing is on-going - 535 items submitted and/or approved to date.
  - DB Team has processed 262 requests for information (RFIs) and 36 Design Clarifications to date.

Sitework:

- Landscaping and irrigation systems are essentially completed.

Headworks:

- Facility is essentially completed including auto-mode loop testing with clean water

Biological Nutrient Removal (BNR)/Membrane Bioreactor (MBR) Treatment:

- Facility is essentially completed including auto-mode loop testing with clean water.
- Contractor installed Suez MBR cassettes and Suez commissioned the system with clean water.

Reverse Osmosis (RO)/Ultraviolet Advanced Oxidation Process (UV AOP):

- Facility is essentially completed. Clean water testing is pending the completion of wastewater and biological commissioning of the MBR system to ensure the production of suitable effluent/influent.

Purified Water Facilities:

- Facility is essentially completed and being tested with clean water.
- Contractor to load Calcite Contactors in October 2022

Residuals/Sludge Processing:

- Facility is essentially completed. Wasting of activated sludge and start-up of dewatering facilities is pending the completion of wastewater and biological commissioning of the MBR system.

Electrical and Controls:

- Facilities are completed and ready for service. Troubleshooting of various power and control systems is anticipated to be necessary during start-up and commissioning activities

Chemical Storage and Feed:

- Facility is essentially completed including auto-mode loop testing with clean water.

Operations Building:

- Building is essentially completed with several pending punchlist items.
- Building is otherwise ready for occupancy by City staff (anticipated for early October).

Maintenance Building:

- Building is essentially completed with several pending punchlist items.
- Building is otherwise ready for occupancy by City staff (anticipated for early October).

City Yard Facilities:

- Buildings are essentially completed.

2.2 Project Photographs

The following photos show progress during this period.

September 27, 2022 – Entire Site Overview

September 27, 2022 – Looking south (Fine Screens and Odor Control, BNR basin clean water testing)

2.3 Contract Amendment Summary

Table 5 contains a summary of the contract amendments for the WRF project component. Each amendment included multiple change orders to address changes in scope from the original proposal. A detailed summary of each amendment is provided in Appendix E.

Table 5 WRF Project Contract Amendment Summary

Amendment No.	Council Approval Date	Amount
1	May 2019	$1,636,060
2	March 2020	$63,937
3	May 2020	$5,992,218
4	November 2020	$835,097
5	March 2021	$(195,945)
6	September 2021	$1,132,117
7	June 2022	$0
Revised 7	August 2022	$553,371
	Total	**$10,016,854**

2.4 Project Schedule

Figure 3 shows the WRF construction and startup schedule.

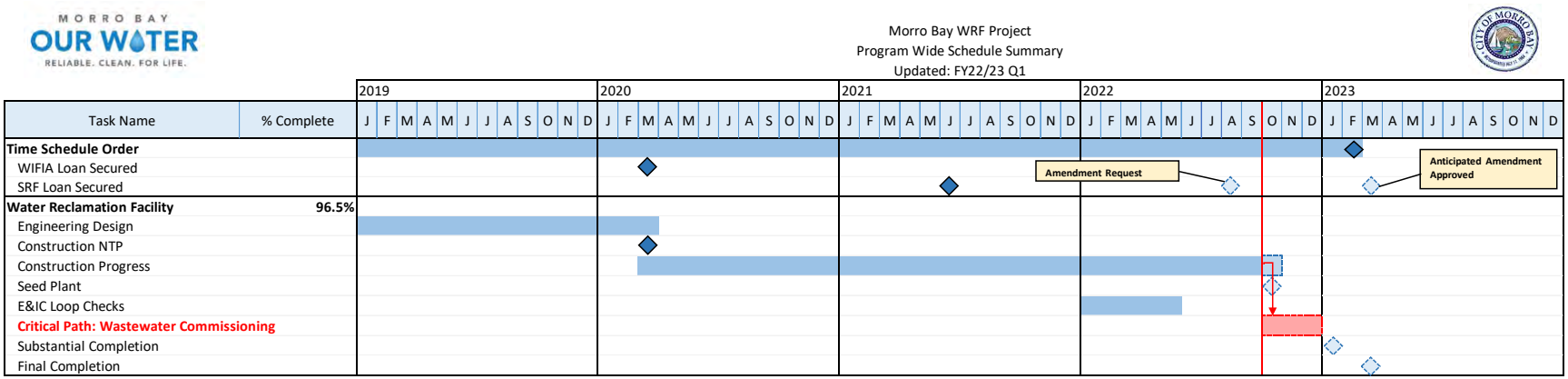

Figure 3 WRF Project Component Schedule

Section 3 – Conveyance Facilities Project

3.1 Construction Progress Summary

Major accomplishments during this period are summarized below:

General and Administrative:

- Contractor has now nearly completed pre-commissioning activities including point-to-point loop testing, deployment of SCADA system, equipment vendor site visits, training of City staff, and clean water recirculation testing.
- Contractor continues equipment submittals and procurement activities:
  - Submittal processing is on-going - 399 items submitted and/or approved to date.
  - RFI processing is on-going – 287 items submitted to date.

Work was performed on the following segments:

Sanitary Sewer Pump Stations:

Pump Station A:

- Pump Station facility is essentially completed.
- Loop testing with clean water on-going.
- Sitework and building completion is on-going.

Pump Station B:

- Pump Station facility is essentially completed.
- Loop testing with clean water on-going.
- Sitework and building completion is on-going.

Existing Lift Station 2:

Work is complete pending final connection to LS-2 and commissioning Pump Station B.

Existing Lift Station 3:

- Contractor started branch lines to LS-3, but work is not completed.
- Contractor is still maintaining temporary above-grade sewer by-pass pipe from Lift Station 3.

Pipelines:

Segment 1 – Atascadero Road (Existing City Wastewater Treatment Plant to Bike Path):

- Pipelines and other facilities are essentially completed within this segment.
- Contractor continues to stage equipment and materials on City property along Atascadero Road.

Segment 2 – Bike Path (Atascadero Road to Morro Creek Foot Bridge):

- Pipelines and other facilities are essentially completed within this segment.
- Contractor needs to form and place concrete for abutment thrust restraint wall.

Segment 3 – Bike Path (Morro Creek Foot Bridge to Main Street):

- Pipelines and other facilities are essentially completed within this segment.
- Contractor needs to form and place concrete for abutment thrust restraint wall.

Segment 4 – Main Street (Bike Path to Quintana Road):

- Pipelines and other facilities are essentially completed within this segment.

Segment 5 – Quintana Road (Main Street to Morro Bay Blvd):

- Pipelines and other facilities are essentially completed within this segment.

Segment 6 – Quintana Road (Morro Bay Blvd to La Loma Avenue):

- Pipelines and other facilities are essentially completed within this segment.

Segment 7 – Quintana Road (La Loma Avenue to South Bay Blvd):

- Joint trench and IPR pipelines, and other facilities, are essentially completed within this segment.
- Contractor is currently completing the 10" Waterline Relocation in this segment.

Segment 8 – South Bay Blvd (Quintana Road to New MB WRF):

- Pipelines and other facilities are essentially completed within this segment.
- Contractor completed tie-in of pipelines at WRF (FM1, FM2, IPR, and Brine Line).

Segment 9 – Vistra Property (Bike Path to Existing Lift Station 2):

- Pipelines and other facilities are essentially completed within this segment.

3.2 Project Photographs

The following photos show progress during this period.

August 1, 2022 – Setting Utility Bridge over Morro Creek

September 16, 2022 – Installing Piping and Pumps at Pump Station B wet well.

3.3 Change Order Summary

Table 6 contains a summary of the contract amendments for the Conveyance Facilities project component. Each amendment included multiple change orders to address changes in scope from the original proposal. A detailed summary of each amendment is provided in Appendix F.

Table 6 Conveyance Facilities Contract Amendment Summary

Amendment No.	Council Approval Date	Amount
1	October 2021	$674,485
2	January 2022	$587,502
3	March 2022	$241,317
4	June 2022	$(54,065)
5	August 2022	$1,253,667
	Total	**$2,702,906**

3.4 Project Schedule

Figure 4 shows the Conveyance Facilities construction and startup schedule.

Morro Bay WRF Project
Program Wide Schedule Summary
Updated: FY22/23 Q1

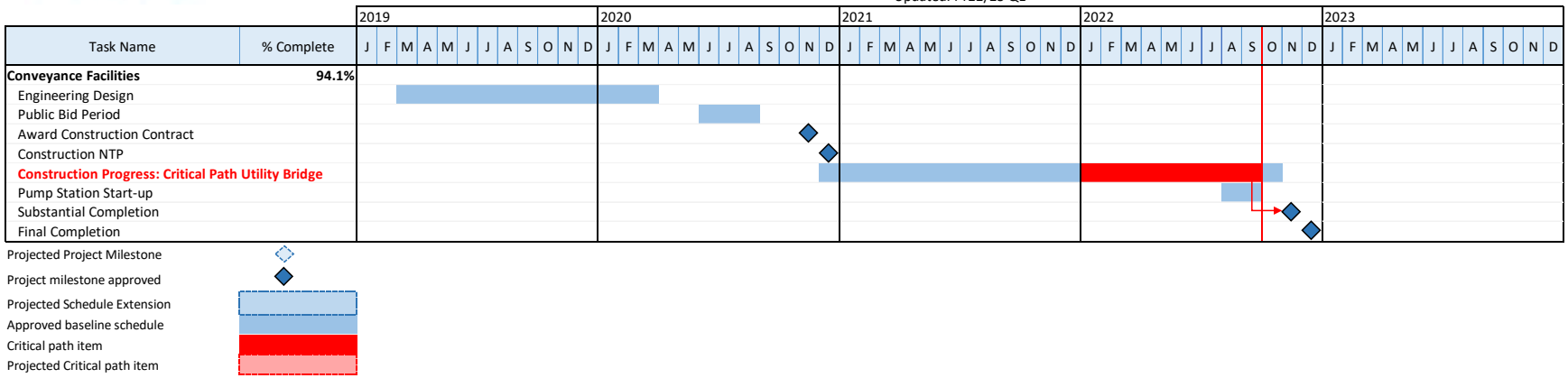

Figure 4 Conveyance Facilities Project Component Schedule

Section 4 – Recycled Water Facilities Project

4.1 Project Progress Summary

The RWF component of the WRF program is currently in the planning pre-design phase, which includes the pilot study for the injection wells. GSI has completed Phase 1 and is currently working on Phase 2 of the hydrogeological work, which resulted in the selection of the west injection area and preliminary siting of the injection wells. The following activities were completed during this period:

- Confluence Engineering Solutions (CES), was awarded the project management contract for the Recycled Water Facilities component of the WRF Program by City Council on August 23rd, 2022. Additionally, Carollo Engineers' contract amendment No. 7 will continue the permitting activities for the Recycled Water Facilities Project.
- The Pilot Injection Well was successfully installed in September of Q1. The Pilot well will initially be used to perform a groundwater injection study and eventually be equipped as a full-scale groundwater injection well. The pilot study will determine injection performance to further characterize the Morro groundwater basin, and the data obtained during the pilot injection study will allow the City to finalize the locations and design characteristics of the other wells that will be included with the Recycled Water Facilities component of the WRF Project. The injection study is anticipated to begin in mid-October of Q2.
- CES has continued coordination meetings with GSI, Carollo and the City to discuss Recycled Water Facility related items. GSI is performing groundwater modeling scenarios for the initial injection volumes of the Recycled Water Facilities to check the travel times and available groundwater yields from the City's existing wells using a volume of injected water up to 825 AFY.

Planned activities for the next quarterly report include the following:

- Begin pilot injection testing.
- Determination of preliminary injection results and aquifer characteristics.

4.2 Project Photographs

September 1, 2022 – Installation of the Pilot Injection Well Conductor Casing

September 2, 2022 – Installation of the Pilot Injection Well Perforated Casing

4.3 Project Schedule

Figure 5 shows the Recycled Water Facilities construction and startup schedule.

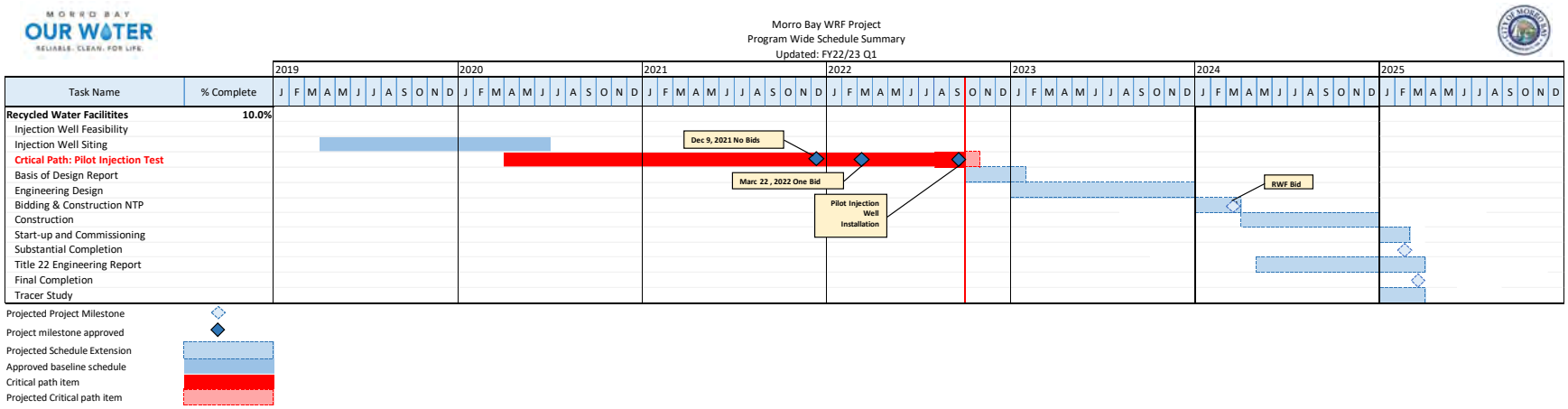

Figure 5 Recycled Water Facilities Project Component Schedule

Appendix A

ABBREVIATIONS

AOP	advanced oxidation process
BMP	best management practice
BNR	biological nutrient removal
City	City of Morro Bay
CWRSF	Clean Water State Revolving Fund
EPA	Environmental Protection Agency
FBV	Filanc Black & Veatch
FY22	2021-22 fiscal year
GSI	GSI Solutions, Inc.
HVAC	heating, ventilation, and air conditioning
MBR	membrane bioreactor
NOV	notice of violation
Q3	third quarter
RO	reverse osmosis
RWF	recycled water facility
RWQCB	Regional Water Quality Control Board
SWPPP	stormwater pollution prevention plan
SWRCB	State Water Resources Control Board
TSO	time schedule order
UV	ultraviolet
WIFIA	Water Infrastructure Finance and Innovation Act
WRF	water reclamation facility

Appendix B

QUARTERLY EXPEDITURES BY BUDGET CODE

City Budget Code [1]	Fund Name	Total Q4 FY21/22 Expenditures	Vendor Name	Project Component
4110	Regular Pay	Summarized in Total Personnel Services		
4599	Other Pay			
4910	Employer Paid Benefits			
4911	Pension Normal Cost			
4999	Labor Costs Applied			
Total Personnel Services		**$112,562.37**	**City of Morro Bay**	**General Project**
5199	Miscellaneous Operating Supplies			
Total Supplies		**$16,631.95**	**Various**	**General Project**
6101	Legal Services – General	$29,688.50	Aleshire & Wynder	General Project
6103	Financial Audits	-	-	-
6107	Promotion & Advertising	-	-	-
6220	Postage	-	-	-
6301	Electricity	-	-	-
6303	Water	$11,140.50	City of Morro Bay	General Project
6510	Meetings & Conferences	-	-	-
6513	Meals & Lodging	$35.75	Mechanics Bank	General Project
6514	Travel Expense	-	-	-
6640	Maintenance Contracts	-	-	-
6710	Notices & Publications	-	-	-
6750	Business Equipment Rental	-	-	-
Total Services		**$40,864.75**	**Various**	**General Project**
6104	Engineering Services	$59,562.73	GSI Water Solutions, Cleath-Harris Geologists	RWF
6105	Consulting Services	$49,540.00	Confluence Engineering, Bartle Wells	General Project
6152	Outside Laboratory Testing	-	-	-
6161	Licenses & Permits	-	-	-
6162	Mandated Fees/Inspections	-	-	-
6195	Rate Study	-	-	-
6196	Program Management & DB Procurement	$864,953.65	Carollo Engineers	General Project

City Budget Code (1)	Fund Name	Total Q4 FY21/22 Expenditures	Vendor Name	Project Component
6197	Grant Support	-	-	-
6198	Government Relations	-	-	-
6640	Maintenance Contracts	-	-	-
7101	Land Acquisition	-	-	-
Total Project Soft Costs		**$974,056.38**	**Various**	**RWF, General Project**
6106	Contractual Services	$4,338,100.95	Anvil Builders	Conveyance
7103	Water Reclamation Facility (WRF)-Onsite Improv Design/Build	-	-	-
7104	Design Phase - Lift Station & Force Main	$38,324.25	Water Works Engineers	Conveyance
7105	Planning & Permitting	$390,258.96	KMA, Far Western, Cogstone	Conveyance
7106	Design Phase - Injection Wells & Recycled Water Pipeline	-	-	-
7107	WRF - On- Site Imprv - Build	$2,354,845.74	FBV	WRF
7108	Injection Well Construction - WRF	-	-	-
7109	Lift Station/FM Construction Phase - WRF	-	-	-
7110	Pilot Well Construction - WRF	-	-	-
Total Construction Costs		**$7,121,529.90**	**Various**	**Conveyance, WRF**
Total Quarterly Expenditures		**$8,265,645.35**		

Notes:

(1) City Budget Codes are from the latest Accounts Payable Report run on 10/3/2022.

(2) Total quarterly expenditures shown only include invoices paid by the City in this quarter and are derived from a cash basis of accounting using the Accounts Payable reports provided by the City approximately one week after the end of the quarter. Total quarterly expenditures shown may differ from City fiscal year-end budget performance reports that are based on a modified accrual basis of accounting, which reallocates current quarter expenditures for services rendered in prior fiscal year back to the prior fiscal year.

Appendix C

WRF PROGRAM FUNDING REQUESTS AND REIMBURSEMENTS STATUS SUMMARY

Agency	Description	No.	Date Submitted	Requested Amount	Approved Amount	Received
SWRCB	CWSRF Planning Loan	1	18-Dec	$289,595	$217,441	Yes
SWRCB	CWSRF Planning Loan	2	19-Nov	$6,431,295	$5,312,748	Yes
SWRCB	CWSRF Planning Loan	3	20-Oct	$3,910,211	$2,415,669	Yes
SWRCB	CWSRF Planning Loan	4	21-Oct	$930,385	$484,617	Yes
SWRCB	CWSRF Planning Loan	5	22-Apr	$0 (see 5A)	Pending	No
SWRCB	CWSRF Planning Loan	5A	26-Sep	$831,518	Pending	No
SWRCB	CWSRF Construction Loan	1	21-Sep	$11,185,433	$11,185,433	Yes
SWRCB	CWSRF Construction Loan	2	21-Nov	$10,886,581	$10,886,581	Yes
SWRCB	CWSRF Construction Loan	3	21-Dec	$5,463,514	$5,463,514	Yes
SWRCB	CWSRF Construction Loan	4	22-Feb	$5,943,018	$5,943,019	Yes
SWRCB	CWSRF Construction Loan	5	22-Mar	$6,095,373	$6,095,373	Yes
SWRCB	CWSRF Construction Loan	6	22-May	$3,237,138	$3,237,138	Yes
SWRCB	CWSRF Construction Loan	7	22-Jun	$2,145,403	$2,145,403	Yes
SWRCB	CWSRF Construction Loan	8	22-Jul	$4,245,018	$4,245,018	Yes
SWRCB	CWSRF Construction Loan	9	22-Aug	$3,896,973	Pending	No
EPA	WIFIA Loan	1	20-May	$1,100,944	$1,100,944	Yes
EPA	WIFIA Loan	2	20-Jun	$61,014	$50,486	Yes
EPA	WIFIA Loan	3	20-Jul	$3,489,409	$3,489,409	Yes
EPA	WIFIA Loan	4	20-Jul	$2,461,121	$2,461,121	Yes
EPA	WIFIA Loan	5	20-Aug	$142,863	$142,863	Yes
EPA	WIFIA Loan	6	20-Oct	$1,635,106	$1,635,106	Yes
EPA	WIFIA Loan	7	20-Dec	$3,008,572	$3,008,572	Yes
EPA	WIFIA Loan	8	20-Dec	$3,671,499	$3,671,499	Yes
EPA	WIFIA Loan	9	21-Jan	$5,553,851	$5,553,851	Yes
EPA	WIFIA Loan	10	21-Mar	$2,440,399	$2,440,399	Yes
EPA	WIFIA Loan	11	21-Apr	$1,621,783	$1,621,783	Yes
EPA	WIFIA Loan	12	21-May	$2,988,342	$2,988,342	Yes
EPA	WIFIA Loan	13	21-Jun	$3,544,987	$3,544,987	Yes
EPA	WIFIA Loan	14	21-Jul	$2,692,977	$2,692,977	Yes
EPA	WIFIA Loan	15	21-Aug	$1,328,552	$1,328,552	Yes
EPA	WIFIA Loan	16	21-Sep	$488,601	$488,601	Yes
EPA	WIFIA Loan	17	21-Oct	$321,117	$321,117	Yes
EPA	WIFIA Loan	18	21-Nov	$346,279	$346,279	Yes
EPA	WIFIA Loan	19	21-Dec	$1,005,341	$1,005,341	Yes

Agency	Description	No.	Date Submitted	Requested Amount	Approved Amount	Received
EPA	WIFIA Loan	20	22-Jan	$337,646	$337,646	Yes
EPA	WIFIA Loan	21	22-Mar	$956,562	$956,562	Yes
EPA	WIFIA Loan	22	22-Apr	$395,308	$395,338	Yes
EPA	WIFIA Loan	23	22-May	$1,315,288	$1,315,288	Yes
EPA	WIFIA Loan	24	22-Jun	$155,599	$155,599	Yes
EPA	WIFIA Loan	25	22-Jul	$169,286	$169,286	Yes
EPA	WIFIA Loan	26	22-Aug	$723,244	$723,244	Yes
	Total			$107,447,145	$99,577,146	

Appendix D

PROGRAM MILESTONES

Milestone	Planned Completion Date
General Project	
Compliance with the TSO	2/23/2023
WIFIA Loan Secured	3/9/2020
SRF Loan Secured	7/31/2021
WRF	
Begin Design	11/5/2018
Construction Notice to Proceed	3/20/2020
Plant Seeding	10/4/2022
Substantial Completion	1/20/2023
Final Completion	3/20/2023
Conveyance Facilities	
Deliver 100 Percent Design	6/15/2020
Bid Advertisement	6/16/2020
Award Construction Contract	11/10/2020
Construction Notice to Proceed	12/14/2020
Substantial Completion	11/9/2022
Final Completion	12/24/2022
RWF	
Select Preferred Injection Area	6/17/2020
Pilot Injection Well - Complete	10/1/2022
Basis of Design of Report - Complete	1/31/2023
Engineering Design - Begin	1/1/2023
Construction Notice to Proceed	3/15/2024
Substantial Completion	2/15/2025
Final Completion	3/15/2025

Appendix E

FBV AMENDMENT DETAILS

City of Morro Bay
Water Reclamation Facility
WRF Design/Build Project GMP

PCO No.	Title	Descriptions	Status	CCO AMOUNT	Comments
1	New Sodium Hypochlorite Feed for Plant Water	Add a sodium hypochlorite (disinfection) chem feed pump, add sodium hypochlorite double contained piping from the Chemical Facility to the Recycled Water pumps. Additional electrical and controls for the new sodium hypochlorite pump. The added pump is needed for redundancy.	Approved	$ 78,576.00	Executed - Part of GMP
2	Change Architecture of Operations Building	The City requested to change the Operations Building exterior architecture back to a basic style, to delete the clerestory but to include cupolas and solatubes. The City requested the change to reduce project costs.	Approved	$ (21,623.00)	Executed - Part of GMP
4	Headworks Odor Control	Adding foul air ducting from the Fine Screens and SAFE Diversion Box to the Headworks Odor Control Biofilter. Cost also includes adding a cover to the SAFE Diversion Box. The ducting and cover were adding to reduce foul air emissions.	Approved	$ 18,422.00	Executed - Part of GMP
5	Remove Canopy and Monorail at MBR	The MBR tank was originally design with a canopy cover and monorail/crane hoist. The monorail and crane hoist were originally included to move MBR cassettes in and out of the tank for cleaning and maintenance. The City requested the change to reduce project costs. In the future the City will use a crane or boom truck to remove MBR cassettes when necessary.	Approved	$ (185,434.00)	Executed - Part of GMP
9	Consolidate Chemical Facilities	The original design provided chemical feed pumps and storage tanks at various locations where needed on site. The City requested to centralize all chemical storage tanks and feed equipment to one facility. Work includes a larger Chemical Facility structure, and additional chemical ductbanks and double containment piping.	Approved	$ 218,978.00	Executed - Part of GMP
10	Modify Chemical Piping	Revise underground chemical piping, to change double containment carrier piping from rigid pipe to flexible ducting. The City accepted this change to reduce project costs.	Approved	$ (15,856.00)	Executed - Part of GMP
15	Remove Solids Dumpster Lid	At the Solids Handling Area, delete the Solids Dumpster Lid and delete the Hypalon Splash Guards. Add a canopy / awning structure over the dumpster area by extending the Solids handling Area canopy. The City prefers the open-air solids dumpster while providing the canopy to protect dewatered solids from rain and atmospheric moisture.	Approved	$ 14,543.00	Executed - Part of GMP
16	Modify Outfall Pump Station	Increase the guaranteed pump station capacity to 8.14 MGD. Change the original design of 3 medium sized VFD controlled pumps, to a modified configuration using 2 smaller pumps and 2 larger pumps, all with VFDs. Also add and modify pump station manifold piping and valving as necessary. The City requested the change to ensure adequate future flow capacity and maximize pumping efficiency.	Approved	$ 367,632.00	Executed - Part of GMP
17	Add SAFE Equalization Tank	Add SAFE Settle Tank (water bearing concrete structure) upstream of the SAFE system. The SAFE Settle Tank is added to the Sludge Holding Tank concrete structure. The new SAFE Settle Tank will either overflow to the SAFE System, or be pumped back to the SAFE Diversion Box using Solids Handling Pumps. Various segments of SAFE System diversion piping are upsized as required.	Approved	$ 504,116.00	Executed - Part of GMP
18	Instrumentation and Control Changes	The City prepared and issued a SCADA Master Plan for the WRF program. In January 2019, City staff and the DB team met and agreed on multiple technical items to coordinate between the City's SCADA Master Plan requirements and the DB Agreement scope. The PCO #18 proposal document includes a 6 page table of the multiple hardware and software changes.	Approved	$ 75,266.00	Executed - Part of GMP
19	Reduce Size of the Product Water Tank	The original DB Agreement included a 500,000 gallon bolted steel glass lined Product Water Tank. The City requested to decrease volume of Tank to 200,000 gallons. This was done to save project costs while also maintaining a suitable Product Water storage capacity on site.	Approved	$ (129,681.00)	Executed - Part of GMP
21	Revise Maintenance Building Layout and Size	The Maintenance Building footprint is expanded from 50'x70' to 60'x90' and a second vehicle sized roll-up door is added. The change order also includes revised site grading and eliminating a step in the building foundation slab, such that the new layout providing a larger, single level, vehicle accessible, shop area.	Approved	$ 516,583.00	Executed - Part of GMP
22	Influent Piping and Metering	The original design included a single 18" influent raw sewage pipeline from Teresa Rd to the new Headworks and an 18" influent flow meter at the Headworks. The City requested to change the design to parallel 16" and 12" HDPE influent pipelines, each pipeline with a separate flow meter at the Headworks. The City requested the change to add redundancy to the influent piping system.	Approved	$ 411,766.00	Executed - Part of GMP
23	Install Outdoor-Rated PD Blowers at BNR Facility	Replace the specified Turbo Blowers with Outdoor Rated Dry Screw Positive Displacement Blowers. The change order includes various revisions to blower controls, valving, and Aeration Air piping. The change was made to reduce project costs while still providing a suitable capacity of Aeration Air for the biological facility process.	Approved	$ (58,210.00)	Executed - Part of GMP
24	Remove Bypass of Coarse Screens	Delete the Coarse Screens bypass line, including both above grade and below grade 16" piping, valving, and fittings at the Headworks. The City requested the change to reduce project costs, as the bypass line was deemed not necessary.	Approved	$ (37,137.00)	Executed - Part of GMP
26	SAFE Diversion Box Additions	Add a removable FRP cover over the SAFE Diversion Box. The new cover includes multiple FRP panel sections that are removable by hand and structurally rated to support foot traffic. The change also adds an access ladder and handrail to the top of the Diversion Box. The changes were requested by the City to improve access to the Diversion Box.	Approved	$ 58,304.00	Executed - Part of GMP
28	Size Dewatering as a Building in the Future	Expand the Solids Handling Area concrete foundation slab and canopy to 36'x45'. The change also includes reconfiguring the dewatering belt press, pumps, piping, etc. This change will allow walls to be added around the equipment in the future. The City requested this change in case excessive foul air is emitted in the future and odor control measure become necessary.	Approved	$ 30,983.00	Executed - Part of GMP
30	Match Sludge Blowers to MBR Air Scour Blowers	There are 3 set of air blowers on the project: 2 each for MBR Air Scour, 3 each for BNR Aeration, and 2 each for Sludge Holding Tank mixing. The 2 each MBR Air Scour Blowers are Aerzen Blowers. The City requested that the 3 each BNR Aeration Blowers and 2 each Sludge Holding Tank Blowers also be supplied by Aerzen. The City requested this change for uniformity of equipment providers.	Approved	$ 17,426.00	Executed - Part of GMP
31	Stairs for the Coarse Screens and Grit Basins	The original design included various metal ladders to access the Headworks Coarse Screen and Grit Tank platform skids. This change deletes the ladders and adds 2 each 4 ft tall stair sets to the Course Screens and adds 2 each 8 ft tall stair sets to the Grit Tank area. This change also extends the Headworks foundation slab as required to provide foundations and landings for the added stairs.	Approved	$ 52,870.00	Executed - Part of GMP
32	Sulfuric Acid System	The City requested to add Sulfuric Acid feed pumps and a storage tank at the Chemical Facility. This change includes increasing the size of the Chemical Facility structure, adding double containment piping to both the RO Feed Tanks and the RO/UV Building, and adding all necessary electrical and controls. The City deemed that Sulfuric Acid addition is necessary for pH control/neutralization.	Approved	$ 315,652.00	Executed - Part of GMP
37	PLC/SCADA Software Uniformity	This PCO includes the cost to change PLC hardware and SCADA software from the standard offerings of the MBR, RO, and Headworks manufacturers to the City requested Allen Bradley and Wonderware products. This PCO applies to only those three equipment items and a separate PCO will be generated if a similar change is required for future procurements. The City requested this uniformity.	Approved	$ 201,577.00	Executed - Part of GMP
38	IPR Product Water Tank Bypass	Delete the Product Water Tank bypass line, including both above grade and below grade 8" piping, valving, and fittings at the Product Water Area. The City requested the change to reduce project costs, as the bypass line was deemed not necessary.	Approved	$ (26,087.00)	Executed - Part of GMP
39	NTP Delay	This PCO includes extended general conditions costs due to the delay in receiving construction NTP from April 29, 2019 to March 20, 2020. The amount for the period April 29, 2019 to October 23, 2019 was in dispute and a reduction is provided to reflect the results of a negotiation.	Approved	$ 1,220,532.00	Executed - Part of GMP
40	Headworks Valve Automation	The change adds motor operated valving and controls to the Headworks treatment trains. This allows for automated shifting of flows from one treatment train to the other, as may be needed due to equipment malfunction or other alarm conditions, especially during periods when no operators are on site. The change includes adding 8 each motor operated valves, plus electrical and controls.	Approved	$ 249,946.00	Executed - Part of GMP
41	Perimeter Barbed Wire Fence (Plus 8 days w/ EA 1B.1)	City requested that FBV install a 5-strand barbed wire fence around the entire 27-arcre project/property boundary, and along the Temporary Construction Easement (TCE) on the eastern boundary of site. The eastern boundary TCE fence will be relocated to the actual project/property boundary at project completion.	Approved	$ 79,935.00	Executed - Part of GMP
42	UV/AOP System Modifications	The City requested to delete the Standby UV Reactor from the scope of work to reduce project costs. The change includes FBV added costs for: UV system investigation, technical memoranda, development of alternatives, and resulting design revisions for associated mechanical, electrical, and	Approved	$ (33,481.00)	Executed - Part of GMP
44	Tank Access Improvements	This Change adds staircases to replace ladders throughout the site for improved access to treatment process basins. The change adds stairs, catwalks, and handrails at the BNR tanks, adds stair and landings at the SHT, add stairs and a grating platform at the MBR tank, and adds stairs, catwalk, and handrails at the SAFE system.	Approved	$ 210,327.00	Executed - Part of GMP
45	Maintenance Ceiling Revisions and Auto Roll-Up Door	The City requested to add a motor actuator on one of the 14'X14' roll-up door at the Maintenance Building. This change includes the required added electrical and controls.	Approved	$ 21,009.00	Executed - Part of GMP
46	Curbed Washdown Areas	This change adds containment curbs, sloped slabs, floor drains, and drainage piping to sewer for various wastewater washdown areas. The change adds curbed washdown areas for the MBR cassette maintenance area, the solids/sludge dewatering area, and the Headworks Coarse Screen and Grit Tank area. The City requested the curbed washdown areas to better contain sewage spills.	Approved	$ 76,250.00	Executed - Part of GMP

City of Morro Bay
Water Reclamation Facility
WRF Design/Build Project GMP

PCO No.	Title	Descriptions	Status	CCO AMOUNT	Comments
47	Changes to Furnishings and Residential Equipment	This Change adds office furnishings and appliances for the Operations and Maintenance Buildings, including desks, chairs, tables, shelves, cabinets, control room console, flat-screen monitors, kitchen and laboratory appliances, lockers, and maintenance building storage racks. The items were discussed and requested by the City during design meetings with the DB team Architect.	Approved	$ 85,194.00	Executed - Part of GMP
50	Revisions to Water/Sewer Supply Storage Sheds	The original design includes a Water and Collections Storage Shed, with two equal sized rooms each with an exterior double-wide pedestrian door. This change deletes the double doors and adds 10 ft wide roll-up doors and single pedestrian doors for each room.	Approved	$ 13,142.00	Executed - Part of GMP
52	Analyzer Relocation and Enclosures	Relocate analyzers at Outfall/IPR Pump Station to indoors at the RO/UV Building, including adding 120' of sample piping between the sample point and building. Relocate analyzers at Dechlorination Facility to indoors at the Water/Collections Storage Shed, including adding 70' of sample piping between the sample point and building, and adding 70' of drainage piping to sewer.	Approved	$ 76,555.00	Executed - Part of GMP
55	Notice of Dispute - PG&E Temporary Power	This PCO addresses the cost paid to PG&E for temporary power service. It has been a disputed item and negotiation has led to an agreement to split the cost 50/50.	Approved	$ 13,163.00	Executed - Part of GMP
56	Impacts of Water Quality Changes	In September 2019, the City provided updated influent Water Quality data to use as the basis of design. Multiple parameters were significantly different than listed in the DB Agreement. The revised Water Quality data impacted the RO equipment design. The added costs are for H2O Innovations (RO manufacturer) as well as for electrical and control changes by Electricraft.	Approved	$ 282,420.00	Executed - Part of GMP
57	Soil Lateral Earth Pressure	This change adds foundation sub-drains around below grade water bearing concrete structures as recommended by FBV and the Geotechnical Engineer. This change adds Miradrain Panels and 4" PVC drain piping around the perimeter of the BNR basin and Sludge Holding Tanks, to relieve lateral soil pressure on the concrete structures.	Approved	$ 116,329.00	Executed - Part of GMP
58	Permanent Exclusion Fencing	As required by environmental regulatory agencies, a concrete barrier wall for wildlife exclusion is added along the entire Eastern boundary of the site from Teresa Rd to the northern most tip of the site. The concrete barrier wall shall extend 24 inches above grade and 36 inches below grade, and include a nominal 6-inch top lip to serve as a climbing barrier.	Approved	$ 855,991.00	Executed - Part of GMP
59	Increased Escalation Costs	This PCO includes escalation costs due to the delay in receiving construction NTP from October 23, 2019 to March 20, 2020.	Approved	$ 1,232,677.00	Executed - Part of GMP
61	PCO Design Impacts	This PCO is in response to FBV's claim for engineering redesign costs from changes requested by the City but subsequently reversed due to the cost being too high or otherwise excessive. The PCO also addresses FBV's claim for inefficiencies resulting from "changes in direction throughout the design development process".	Approved	$ 158,172.00	Executed - Part of GMP
62	Conduit Alternative Design	This change removed the original DB Agreement, Exhibit B, requirement to use PVC coated galvanized rigid steel conduit systems in all exterior and/or process areas on site. FBV proposed to use galvanized rigid steel conduit systems (without PVC coating) in all project locations as a value engineering suggestion. The City accepted the proposal in an attempt to reduce project costs.	Approved	$ (268,400.00)	Executed - Part of GMP
64	Reduce Performance Period	The DB Agreement requires 6-months of FBV support during the Performance Test Period. The City requested to delete this requirement as not necessary. Note FBV remains responsible for the 12-month warranty against equipment and/or system malfunctions. The credit amount is taken directly from FBV's original bid proposal document.	Approved	$ (35,450.00)	Executed - Part of GMP
65	Davis Bacon Wage Increases	The Contract amount is increased to compensate for the required implementation of CA Wage Determination dated 10/5/2018. FBV's original bid proposal document was based on CA Wage Determination dated 1/5/18	Approved	$ 63,937.00	Executed - Part of GMP
66	Caltrans Intersection Improvements	Delete scope of work to extend intersection at Teresa Road and South Bay Blvd for the new WRF Access Road. Adjust centerline of the WRF Access Road to be offset from the centerline of South Bay	Approved	$ (21,893.00)	Executed - Part of GMP
67	BNR System Modifications	This change was requested by City to increase Aeration Air systems as required for full nitrification in the biological process. The costs include upsizing 3 each aeration blowers, stainless steel aeration piping, air meters, air valves, and adding aeration diffusers in the BNR basins. The change also adds Ammonium Sulfate pumps, tank, piping, and increases the size of the Chemical Facility.	Approved	$ 742,405.00	Executed - Part of GMP
68	SAFE Equalization Settle Tank Drain Piping	This change is requested by the City to provide a new pipeline to drain the SAFE Settle Tank. This pipeline will tie in to the existing dewatering feed pumps and will allow draining the tank back to the SAFE Diversion Box. The work includes adding 80 lf of 6" piping and adding 2 each 6" manual valves.	Approved	$ 62,215.00	Executed - Part of GMP
69	Third Party Testing and Inspection	The responsibility for 3rd party testing and inspection costs were in dispute for several months prior to construction. In April 2020 the City and FBV agreed that the cost of these services would be split 50/50 between the parties, up to a cap of $200K. The agreement included the provision that if additional services are required above $200K, it would be paid by the City.	Approved	$ 100,000.00	Executed - Part of GMP
71	CDFW Site Restrictions (Direct Costs / Inefficiencies)	The construction NTP on 3-20-2020 included restrictions from working in the designated spoils disposal area on site. The restrictions by CDFW were due to an erosional feature and were not resolved until 7-14-2020. As a result of the restrictions, FBV was required to stockpile spoils outside the disposal area, and then haul and grade the material a second time after the restrictions was lifted.	Approved	$ 254,443.00	Executed - Part of GMP
72	Owner Trailer Utility Hook Ups	This change provides utility connections to the Owner/Carollo field office trailer at the WRF. The work includes grading the trailer site, installing a temporary potable water connection, connecting temporary electrical, and providing electrical power through the project duration. The work also includes installing a temporary USPS jobsite mailbox.	Approved	$ 19,593.00	Executed - Part of GMP
73	Main Gates in Perimeter Fence	This change was requested by the City to add 2 pedestrian gates in the WRF perimeter fence, one north of the Operations Building and one at the northern most tip of site. Along with the pedestrian gate north of the Operation Building, also provide a 4' wide set of concrete stairs and a 4 ' wide sidewalk between paved areas.	Approved	$ 27,031.00	Executed - Part of GMP
74	Parking Canopy Electrical Receptacles	This change adds 7 outdoor rated duplex 120VAC electrical outlets on canopy poles around the Vehicle/Equipment Storage Canopy, and the WRF Parking Canopy. The work includes a new 480V circuit from the RO Building Electrical Room, a new 5KVA transformer, and all required underground and exposed power conduits, junction boxes, and outlet receptacles.	Approved	$ 42,346.00	Executed - Part of GMP
75	Security Windows at Admin Building	This change was requested by the City to add a security window in the lobby of the new Operations Building to separate City staff from members of the public in the lobby (similar to City Hall).	Approved	$ 11,079.00	Executed - Part of GMP
76	Additional Sodium Bisulfite Pump	This change was requested by the City to provide a redundant (second) Sodium Bisulfite feed pump at the Chemical Facility, including all associated mechanical work, piping, electrical and controls. This change also provides heated tote blankets for the Sodium Bisulfite storage totes to control temperature during cold weather. An electrical outlet is also added for the heated tote blankets.	Approved	$ 58,243.00	Executed - Part of GMP
77	COVID-19 Costs	The DB Agreement stipulates that an "epidemic" or "quarantine restriction" is a compensable Force Majeure event. FBV originally submitted costs in the amount of $152K for COVID-19 impacts based on added janitorial service, added COVID protective supplies, added Safety Officer time, added costs to send infected workers home for quarantine, and loss of efficiency (1 hr. per worker per day from 3/20/20 to 6/1/20 and 10 min. per worker per day from 6/1/20 to 3/20/21. The City was able to negotiate this cost down to $125K based on a reduction of the assumed inefficiencies and was able to gain FBV agreement that this costs is considered final (i.e. that any future infections would be based on individuals deciding not to be vaccinated rather than Force Majeure).	Approved	$ 125,000.00	Executed - Part of GMP
78	Soil Slip Differing Site Conditions	On May 5, 2020 an unidentified ancient landslide was discovered when mass grading the cut slope above the Operations Building. This is a differing subsurface condition per Section 3.10.2 of the Agreement. The costs represent the additional effort associated with remediating the landslide.	Approved	$ 280,013.00	Executed - Part of GMP
79	Modify Water/Sewer Supply Storage Sheds (Ref. PCO 50)	This item is a continuation of PCO 50. FBV claims that their previous quote did not include all costs associated.	Approved	$ 10,847.00	Executed - Part of GMP
82	PLC/SCADA Uniformity - Bal. of Equipment (Ref. PCO #37)	This PCO includes the cost to change PLC hardware and SCADA software from the standard offerings of the Belt Press and Cloth Disk Filter (SAFE) manufacturers to the City requested Allen Bradley and Wonderware products. This PCO applies to only those equipment items. PCO #37 was similarly executed for other equipment manufacturers on the project.	Approved	$ 108,887.00	Executed - Part of GMP
84	Alternate Red Legged Frog Barrier (Ref. PCO 58)	Environmental agencies overseeing the project have allowed an alternate wildlife barrier along the Eastern boundary of site. The PCO 58 concrete barrier is only required from Teresa Rd to the facility gate (400'). The remaining 1700' of exclusionary barrier shall be 2 mm thick HDPE attached to 6' chain link fencing, 24" above grade, 36" below grade, with a rigid 4" FRP top lip climbing barrier.	Approved	$ (468,768.00)	Executed - Part of GMP
86	Pothole Existing Water Valve in Teresa Road	The City requested that FBV pothole an existing City water line and shut off on Teresa Road. On the next day, the City requested FBV pothole the 8" branch line service to the WRF property. The work was on T&M.	Approved	$ 5,189.00	Executed - Part of GMP
87	Modify Alternate Conduit Design Scope (Ref. PCO 62)	This change provides PVC coated electrical conduit systems (conduits, boxes, accessories) for all wastewater and product water processing and washdown areas, including outdoor process areas and indoors at the RO/UV Building. PVC coated Galvanized Rigid Steel (GRS) conduits provide superior corrosion protection. This PCO essentially reverses previous PCO #62.	Approved	$ 272,822.00	Executed - Part of GMP

City of Morro Bay
Water Reclamation Facility
WRF Design/Build Project GMP

PCO No.	Title	Descriptions	Status	CCO AMOUNT	Comments
88	Dead-Front Control Panels	City staff requested that all control panels be dead-front type, wherein no controls are exposed, and that a solid front door is furnished (i.e. keyed or with padlock hasp). FBV has submitted costs in the amount of $37K and the City is in agreement. This change is being implemented on the following system control panels: Kusters (Headworks), Suez (MBR), Aerzen (Blowers), Gierlich- Mitchell (Sanitary Lift Station), Charter Machine (Dewatering), and other minor panels as required.	Approved	$ 37,774.00	Executed - Part of GMP
90	24Vdc Digital Output Circuits	City staff requested that all control digital output circuits be 24vDC to match the 24vDC input signals as required by the DB Agreement. The City requested this to prevent potential signal interference. FBV had planned to use 120vAC digital outputs as the DB Agreement only stipulated the 24vDC signals on inputs (not outputs). This could potentially cause signal interferences and various control system disruptions. This item was disputed by the City as matching input and output signals is a design standard for some design firms (including Carollo). As part of negotiations the City elected to accept the proposed costs which include additional relays and power supply units in various Motor Control Centers (power distribution panels) for the 24Vdc PLC digital circuits being added.	Approved	$ 25,689.00	Executed - Part of GMP
91	Standardize Equipment Color (Tnemec 32GR Light Gray)	City staff requested that a standard color be established for all manufactured equipment, piping, etc., including for all field applied coatings. This is being implemented so that plant staff only need to maintain supply of one coating color, to simplify coating spot repairs during normal maintenance. The selected color is Tnemec 32R Light Gray or equal. FBV coordinated and made requests to each equipment supplier to change their standard or typical factory color to the Tnemec Light Gray or equal. Some supplier had costs impacts for the equipment color change.	Approved	$ 12,500.00	Executed - Part of GMP
92	Soil Slip Differing Site Conditions Claim (2021)	On January 28, 2021, the previous cut-slope landslide area reactivated during a major storm. The DB Team has performed extensive site investigation, and develop preliminary remediation drawings, and submitted total costs in the amount of $825,300 to address the known conditions. The remediation scope of work includes: removal and stockpiling of approximately 17,000 cy of loose material to the mapped slip plane, benching into competent native subgrade material, installing a subdrain system at each bench with drainage to surface, placement and compaction of $17,000+ cy of engineered fill, surface contours to enhance precipitation run-off, concrete v-ditches to divert run-off from the areas, and the installation of two inclinometer for future monitoring by the City (monitoring not included).	Approved	$ 825,300.00	Executed - Part of GMP
93	NEMA 4X Electrical Enclosures per Exhibit B	The City is requiring that all exterior electrical enclosures be NEMA 4X type. FBV submitted costs in the amount of $97K to provide the NEMA 4X enclosures. The City does not agree with the contractual merits of this cost request. The City's contention is that the DB Agreement calls for all exterior and exposed electrical and control enclosures are to be NEMA 4X rated. FBV has argued that their intention, and the approved IFC design documents indicate reasonable alternatives to NEMA 4X. The City and FBV have agreed to the settlement amount noted herein and all applicable panels will be	Approved	$ 40,000.00	Executed - Part of GMP
94	Security System Revisions	The City requested the following improvements to the facility security system: add one exterior security camera to enhance coverage of the facility grounds (6 other cameras already in design), add door detectors and motion sensors at the RO Bldg, Storage Shed, Electrical Bldg (detectors and sensors at Ops Bldg and Maint Bldg are already in design). FBV submitted costs in the amount of $25K and the City is agreeable to the proposed amount.	Approved	$ 25,659.00	Executed - Part of GMP
96	January 2021 Storm Event & Texas Ice Storm	FBV has submitted costs in the amount of $40K for actual expenditures associated with the January 2021 major storm (8"+ of precipitation in 48 hours). The work included: actual labor, equipment, and materials to prepare for the storm, maintain the site during the storm while work was otherwise shutdown, and significant post storm efforts to clean and repair storm drain facilities, repair damaged embankments, and repair other erosional damage. The DB Agreement stipulates that "storms" are compensable Force Majeure events. As part of the settlement, City and FBV agree to amend the DB Agreement in that only non-compensable time extensions will be requested by FBV, and/or granted by the City, for any future weather related delay or impact.	Approved	$ 40,195.00	Executed - Part of GMP
98	Materials Testing & Inspection (3rd Party)	Filanc-Black&Veath (FBV) is reimbursed for costs associated with 3rd party materials testing and special inspections. Under previous Amendment #3, FBV and the City agreed "... All 3rd party testing and inspection shall be provided by FBV up to $200,000. Anything in excess of $200,000 shall be borne by the City". This change amount is based on actual applicable testing and inspection costs above	APPROVED	$ 143,120.00	Executed - Part of GMP
100	Add Thin-Client Licenses and Maint Bldg Work Station	FBV is reimbursed and compensated for extra work associated with additional Control System elements as follows: (1) Add a thin client workstation in the Maintenance Building, including thin client machine with keyboard and mouse, currently there is just a 42" monitor; and (2) Add two additional Wonderware Supervisory Client License w/ Historian Client and one (1) Dell Wyse 570 Thin Client w/	APPROVED	$ 17,229.00	Executed - Part of GMP
101	COVID-19 Related Material Cost Escalation Claim	FBV is reimbursed for extra costs associated with COVID-19 material cost escalations from EDI (air diffusers), Jensen Precast (vaults and manholes), Miltimore Tile (bathroom tile), Pacific Acoustics (ceiling tiles) and S&M Fire (fire protection systems). FBV is requesting this material cost escalation reimbursement beyond normal yearly inflation statistics based on stipulations encompassed within the Design-Build Agreement between the City and FBV.	APPROVED	$ 48,744.00	Executed - Part of GMP
102	City Requested SCADA Screen Revisions	FBV is reimbursed for extra work associated with the following City requested SCADA screen upgrades: City and FBV screen development subcontractor shall meet to agree on upgrades to the control screen features, then screen development subcontractor shall implement City preferences including screen readability, graphics use, color use, layout of equipment, use of navigational features, etc. This change item also includes costs for similar modifications to control screens provided by equipment vendors to match the new standard, and costs for two additional empty SCADA server racks in Operations Building for the City's future use.	APPROVED	$ 60,000.00	Executed - Part of GMP
105	WRF Monument Entry Sign Modifications	FBV is reimbursed for extra work associated with upgrading the project entrance sign beyond the simple placard sign called for in the Design-Build Agreement, which would have a service life of about 5 years. The modified sign shall consist of 12' long, 4 ft tall , concrete monument (wall) sign, which includes additional grading/earthwork, concrete footing, concrete wall, raised lettering, and 18" diameter City Seal.	APPROVED	$ 23,738.00	Executed - Part of GMP
109	Procurement of Teletruck for City Operations Staff	FBV is reimbursed for the procurement of a JCB Teletruck from Central California Power for City staff use after the project. Details of the purchase are encompassed in the quote dated 2/7/22 from Central California Power (JBC Dealer) to the City of Morro Bay (Stock Order/Serial No:3405218 - Model 30G4x4 CON).	APPROVED	$ 74,562.00	Executed - Part of GMP
110	Chem Facility Fencing Revisions	FBV is reimbursed for extra work associated with modifying the chain link fencing enclosure at Chemical Facility as per the City's direction. The changes entails widening 6 each double swing gates that had already been installed at each chemical bay. The work required removal of existing fence posts, fencing, and anchors, patching of concrete, re-installation of gate posts, and procurement, delivery, and installation of new wider gate panels (12 total).	APPROVED	$ 24,767.00	Executed - Part of GMP
113	Modify H2O SCADA Screen for RO System	FBV is reimbursed for extra work associated with the following City requested SCADA screen upgrades: City and RO System supplier (H2O Innovations) shall meet to agree on upgrades to the screens, and provide additional RO System SCADA screen re-work so that color use and terminologies match the other project SCADA screens.	APPROVED	$ 13,264.00	Executed - Part of GMP
114	RO/UV Building Wall & Ceiling Insulation (DISPUTE)	FBV was directed on 3/3/22 to provide wall and ceiling insulation at Building 16, Storage Shed and Building 50, RO/UV Facility. The City's directive was based upon an ICC Inspection Report dated 10/22/21, from a Certified Deputy Inspector for Code compliance, stating "the R.O. Building has heating, but no insulation at this time, but per Title 24 should be insulated." FBV considered this outside the original GMP scope and submitted original costs of approximately $109K on 5/2/22. On 5/4/22, FBV was informed by email that since the amount was disputed it required City Council approval to proceed. On 5/23/22, FBV was reminded by email that the GMP increase was not currently authorized. On 7/28/22, FBV submitted the current cost of $32,025 for insulation materials only, based on a insulation vendor quote dated 7/11/22. The City will need to take possession of the insulation materials or pay FBV additional cost for disposal.	APPROVED	$ 32,025.00	Executed - Part of GMP
117	Water Main Connection on Teresa Road	FBV is reimbursed for extra work associated with providing and additional length of 18" water line piping, fittings, and gate valve for the new WRF City Water service connection. FBV had originally assumed their connection would be near the edge of pavement on Teresa Road. The final installation includes additional trenching, piping, fittings, and a valve extended to a connection point in the center of Teresa Road. This change also includes installing temporary piping and appurtenances to obtain construction water for the project site until the final connection is completed.	REVIEW	$ 37,503.00	Executed - Part of GMP

City of Morro Bay
Water Reclamation Facility
WRF Design/Build Project GMP

PCO No.	Title	Descriptions	Status	CCO AMOUNT	Comments
118	Fine Screen LOTO Capability (Disputed Item)	FBV is reimbursed for work associated with changes to the fine screens control panel and power feed that will facilitate safe and proper Lockout/Tagout procedures as follows: (1) Relocate flow meter transmitter 180 degrees from current position adjacent to fine screens vendor LCP to make room for new enclosures/equipment. (2) Remove fine screens and conveyor starters, circuit breakers, load monitors, and control wiring. (3) Relocate starters, circuit breakers, load monitors, and control wiring to new individual enclosures for each fine screen and conveyor. (4) Install one 480V main fused disconnect switch for local shutdown of existing 480V circuit. (5) Install one 480V fused disconnect on each new starter enclosure for individual load shutdown. Three individual 480V circuits will tap off of existing 480V circuit per NEC tap rule. (6) Install new 120V circuit from electrical building electrical panel, through local plant control panel, and terminate in vendor LCP for new control power. (7) Remove vendor control power transformer and re-wire door switch. (8) Install galvanized anchor based stand and kickers to support new enclosures. (9) Modify vendor LCP shroud to install conduits for extending new 480V power conductors and 120V control wiring. (10). Energize and test.	REVIEW	**$ 26,905.00**	Executed - Part of GMP
119	Credit for Chemicals Supplied by City	The City is credited back and reimbursed for process facility chemicals to be purchased and supplied by the City rather than FBV as was otherwise required by the Design Build Agreement.	REVIEW	**$ (141,972.00)**	Executed - Part of GMP

Appendix F

ANVIL AMENDMENT DETAILS

City of Morro Bay
Water Reclamation Facility
Lift Stations and Offsite Pipelines Project
CHANGE ORDER 001

Project:	WRF Lift Stations and OffSite Pipelines Project	**Contractor:**	Anvil Builders, Inc.
Date:	October 12, 2021	**Project Manager:**	Gary Silveira

Upon mutual acceptance and execution of this document by the City of Morro Bay (City) and Anvil Builders, Inc. (Contractor), Contractor is hereby directed to make the following changes for the consideration set forth below:

See following page(s) for Descriptions and Reasons for Change

PCO #	DESCRIPTION	Reason For Change	Amount	Contract Time (Calendar Days)
1	SHPO Delay (35 days no dig moratorium)	REG	$ 443,000.00	40 Days
2	Add 2 Each 10-in Valves and 10-in Tee	CR1	$ 23,498.00	0 Days
3	PS-B MAS-Relay Pump Protection Module per DC-01	CR1	$ 13,477.00	0 Days
4	PS-A & PS-B Conduit Changes per DC-02	CR1	$ 6,436.00	0 Days
7	Extend Waterline Relocation from Sta 71+00 to Sta 77+43	DSC	$ 131,096.00	0 Days
12	CA-SLO-2232H Work Interruptions from Stat 147 to Sta 150	REG	$ 56,978.00	0 Days
	NET CHANGE ORDER ADJUSTMENT		$ 674,485.00	40 Days

ORIGINAL CONTRACT AMOUNT	$ 31,493,675.00
Previous Change Orders	$ -
Previous Contract Amount	$ 31,493,675.00
Adjustments by this Change Order	$ 674,485.00
New Contract Amount	$ 32,168,160.00

CURRENT FINAL COMPLETION DATE	2/22/2022
Extension Days s (Calendar)	40 Days
NEW FINAL COMPLETION	4/3/2022

Acceptance of this Change Order constitutes an agreement between the City and Contractor, and the work is to be performed subject to the same terms and conditions as are contained in the Agreement with Contractor and for work on the above-mentioned project.

By signature of this Change Order, the Contractor acknowledges that the adjustments to the Contract Cost and Time contained in the Change Order are in full satisfaction and accord and so waives any right to claim any further cost and time impacts at any time during and after completion of the Contract for the changes encompassed by this Change Order.

When signed by the Owner and Construction Manager and received by Contractor, this document becomes effective IMMEDIATELY, and the Contractor shall proceed with the change(s) described above.

ACCEPTED	APPROVED	ACCEPTED
Anvil Builders Inc.	Carollo Engineers Inc	City of Morro Bay
Contractor (Company Name)	Construction Manager	Owner
(Authorized Signature) (Date)	Authorized Signature (Date)	Authorized Signature (Date)
Gary Silveira - Project Manager	Paul Amico - Project Manager	Scott Collins - City Manager
(Print Name and Title)	(Print Name and Title)	(Print Name and Title)

City of Morro Bay
Water Reclamation Facility
Lift Stations and Offsite Pipelines Project
CHANGE ORDER 001

Project: WRF Lift Stations and OffSite Pipelines Project
Contractor: Anvil Builders, Inc.
Date: October 12, 2021

PCO #	TILE	DESCRIPTION OF CHANGE	Reason For Change
1	SHPO Delay	Project NTP was issued on 12-14-20. Based on a notification from SHPO, a stop work order was issued by the City on 2-16-21 restricting Anvil from conducting any ground-disturbing activities. Upon resolution of SHPO concerns, Anvil was allowed to begin most project ground-disturbing activities on 3-15-21 (35 calendar days later). This issue arose from the Section 3 Consultation between EPA and SHPO required as part of the City's WIFIA loan. The process included submittal of a Monitoring Plan to EPA that SHPO needed to approve before any ground-disturbing activities could begin. The Monitoring Plan was submitted to EPA on 10-3-2020, and EPA sent the document to SHPO in early November 2020. SHPO has a statutory requirement to provide a response within 30 days. EPA received SHPO comments in February 2021, past the 30 day limit. Under the regulations, EPA and the City could have moved forward since the statutory 30 day requirement was not met. However, EPA was not willing to do so. Consequently, the City was not approved by SHPO to move forward with any ground disturbing activities until 3-15-2021. Anvil subsequently filed a delay claim and time impact analysis resulting in this change order.	REG
2	Add 2 Each 10-in Valves and 10-in Tee	Anvil exposed the existing Waterline near Sta 121+30 as required to relocate the line per Contract. The existing piping configuration was discovered to be different from what was shown on the as-built drawings. After a review, City staff concluded that a new 10" Valve and 10" Tee fitting were needed to replace the existing piping configuration. This change will increase the reliability and operability of the water distribution system.	CR1
3	PS-B MAS Pump Relay Module per DC-01	The electrical Design Engineer issued Clarification No. 1 on 3-12-2021, indicating that the Pump Station B Pumps have been provided with a different pump protection system than shown in the design. The conduit and wire changes are required to incorporate the pump protection module. As a result conduit/wiring revisions were necessary at PS-B on Drawings 20-E-02, 03, 04, 05, 08 & and 20-I-01.	CR1
4	PS-A & PS-B Conduit Changes per DC-02	The electrical Design Engineer issued Clarification No. 2 on 4-19-2021, indicating that isolation of AC and DC signals is desired to prevent potential signal interferences. The following revisions will isolate the AC signals from the DC signals. As a result conduit/wiring revisions were necessary at PS-A on Drawings 10-E-3, 10-E-6, and 10-E-7, and at PS-B on Drawings 20-E-4, 20-E-5, 20-E-8, and 20-E-9.	CR1
7	Extend 12" RO Waterline Relocation	The original Contract includes relocating an existing 12" Waterline on Quintana between Sta 77+43 and Sta 82+05, due to the waterline being in conflict with the main Joint trench. Anvil's trenching crew on Quintana encountered the waterline entering the main Joint Trench alignment at Sta 73+50. After additional potholing, the City decided to extend the water line relocation back to Sta 71+00 (adding approximately 643 LF of waterline relocation).	DSC
12	CA-SLO-2232H Work Interruptions	Trenching operations on Quintana Rd near South Bay Blvd (Sta 147 to Sta 150) was significantly impacted by two known archaeological sites (CA-SLO-2232/H and CA-SLO-1183), one of which contains recently discovered human burials. This area needed to have excavations treated differently in that direct loading of trucks was not allowed without first confirming the soil was negative for resources or remains. These instruction were provided and enforced by State mandated archeological and tribal monitors assigned to the project.	REG

REASON FOR CHANGE CODES
CR1: City requested (required)
CR2: City requested (Optional)
E&O: Design Error or Omission
ABI: Anvil request / claim item
DSC: Differing Site Conditions
REG: Regulatory Agency Item

City of Morro Bay
Water Reclamation Facility
Lift Stations and Offsite Pipelines Project
CHANGE ORDER 002

Project:	WRF Lift Stations and OffSite Pipelines Project	**Contractor:**	Anvil Builders, Inc.
Date:	January 11, 2022	**Project Manager:**	Matt Scholfield

Upon mutual acceptance and execution of this document by the City of Morro Bay (City) and Anvil Builders, Inc. (Contractor), Contractor is hereby directed to make the following changes for the consideration set forth below:

See following page(s) for Descriptions and Reasons for Change

PCO #	DESCRIPTION	Reason For Change	Amount	Contract Time (Calendar Days)
9	SoCal Gas Delays and Disruptions	ABI	$ 43,017.00	0 Days
22	6-Inch Waterline Relocation at Pump Station A	DCS	$ 20,147.00	0 Days
23	Miscellaneous Unforeseen Utility Work	DSC	$ 27,198.00	0 Days
27	MTBM Delays and Disruptions - Claim Resolution	ABI	$ 111,161.00	0 Days
28	SLO County APCD Generator Mandates – Procurements	REG	$ 301,703.00	0 Days
34	Bike Path Jack & Bore Concrete Debris Obstruction	DSC	$ 84,276.00	0 Days
	NET CHANGE ORDER ADJUSTMENT		$ 587,502.00	0 Days

ORIGINAL CONTRACT AMOUNT	$ 31,493,675.00
Previous Change Orders	$ 674,485.00
Previous Contract Amount	$ 32,168,160.00
Adjustments by this Change Order	$ 587,502.00
Change Order to Date	$ 1,261,987.00
New Contract Amount	$ 32,755,662.00

CURRENT FINAL COMPLETION DATE	4/3/2022
Extension Days (Calendar)	0 Days
NEW FINAL COMPLETION	4/3/2022

Acceptance of this Change Order constitutes an agreement between the City and Contractor, and the work is to be performed subject to the same terms and conditions as are contained in the Agreement with Contractor and for work on the above-mentioned project.

By signature of this Change Order, the Contractor acknowledges that the adjustments to the Contract Cost and Time contained in the Change Order are in full satisfaction and accord and so waives any right to claim any further cost and time impacts at any time during and after completion of the Contract for the changes encompassed by this Change Order.

ACCEPTED

Anvil Builders Inc.
Contractor (Company Name)

(Authorized Signature) (Date)

Matt Scholfield
(Print Name and Title)

When signed by the Construction Manager, and upon execution of source document Amendment by City Council, this document becomes effective IMMEDIATELY, and Contractor shall proceed with the change(s) described above.

APPROVED

Carollo Engineers Inc / MEG Inc.
Construction Manager

Authorized Signature (Date)

Steve Mimiaga - Construction Mngr.
(Print Name and Title)

City of Morro Bay
Water Reclamation Facility
Lift Stations and Offsite Pipelines Project
CHANGE ORDER 002

Project: WRF Lift Stations and OffSite Pipelines Project
Contractor: Anvil Builders, Inc.
Date: January 11, 2022

PCO	TILE	DESCRIPTION OF CHANGE	Reason For Change
9	SoCal Gas Delays and Disruptions	The project's joint trench, containing multiple pipelines, parallels an existing 16" diameter SoCal Gas high pressure gas main for nearly the entire alignment along Quintana Road. SoCal Gas requires a representative to be on site during all digging activities as well as other work activities occurring within 10 ft of the high pressure gas main (i.e. that could potentially damage or otherwise impact the main). There have been several occurrences where the SoCal Gas representative did not show up for scheduled assignments, which prevented Anvil from performing contract work and/or progressing the joint trench. In these cases Anvil's entire crew was forced to literally stand-by and wait for the SoCal Gas representative to arrive. The City/Carollo have spent considerable time and effort to coordinate between Anvil and SoCal Gas to improve communication and cooperation, but nevertheless, Anvil was negatively impacted on the following days: 5/3/21 for 2 hours, 5/17/21 for 2.5 hours, 5/18/21 for 3 hours, 6/3/21 for 2 hours, 6/17/21 for 2.5 hours for 2 different crews, 8/10/21 for 4 hours.	ABI
22	6" Waterline Relocation at Pump Sta. A	New Pump Station A is located on City property at the City's existing corporation yard on Atascadero Road. As part of the site preparation and demolition work at Pump Station A, an unknown 6" Waterline was discovered and needed to be relocated to construct the pump station. The extra work included potholing and locating the unknown utility, trenching and installation of new by-pass piping, pressure testing and disinfection of the relocated waterline, backfill and other site work.	DSC
23	Miscellaneous Unforeseen Utility Work	During the project work to date, the below noted miscellaneous unforeseen minor utility work was required for contract work to proceed. The following items are acknowledged as unforeseen conditions and as such warrant reimbursement of verified extra costs: (1) potholing unmarked utility at Pump Station A on 5/3/21, (2) emergency work to recover trench caving due to adjacent utilities from Sta 71+75 to Sta 71+85 on 6/13/21, (3) excavating around unmarked 4" (asbestos) Waterline at Sta 146+00 on 7/8/21, (4) Anvil crew standby time during potholing of incorrectly marked telephone conduit on 8/5/21, (5) unknown and unmarked Sanitary Sewer crossing at Sta 88+50, line was struck and repaired on 8/6/21, (6) potholing unknown and unmarked Sanitary Sewer lines on 8/9/21, and (7) unknown and unmarked Sanitary Sewer crossing at Sta 90+50, line was struck and repaired on 8/23/21.	DSC
27	MTBM Delays and Disruptions Claim Resolution	Anvil and their Microtunnel Boring Machine (MTBM) subcontractor, Vadnais Trenchless Services (Vadnais) encountered several unknown utilities, potential obstructions, and differing soil conditions along the MTBM alignment below the Morro Bay Roundabout, including complete equipment stoppages at approximately Sta 98+50 and Sta 98+65. Anvil's subcontractor (Vadnais) claimed delay and equipment standby time for these equipment stoppages that lasted over 8 weeks. During the 8 weeks of work stoppage, Anvil excavated and shored two separate 23 ft deep emergency recovery shafts to clear the apparent obstructions from in front of the MTBM cutting head. However, no actual obstruction was found, located, or confirmed during the recovery shaft excavations. Subsequently, the MTBM casing pipe installation was completed without further incidents. Anvil and Vadnais provided notifications of potential costs under PCO #14 and PCO #27 in excessive $500,000 for the Vadnais equipment downtime, Vadnais loss of crew efficiencies, and for the cost of the two recovery shafts by Anvil. The City initially denied the claim for stoppages at Sta 98+50 and Sta 98+65, as no obstruction was found. The City does not dispute the other costs related to unknown utilities noted herein. After several meetings between the City, Carollo, Anvil, and Vadnais, a claim settlement was reached in the amount of $111,161, wherein all other costs and impacts associated with both PCO #14 and PCO #27, are waived or otherwise agreed upon for the final lump sum amount noted herein.	ABI
28	SLO County APCD Emergency Generator Mandates – Procurements	On 9/24/21, the City received a Notice of Incomplete Applications from SLO County Air Pollution Control District (APCD), pursuant to the Pump Station A emergency generator and the Pump Station B emergency generator. It is City staff understanding that both generators were in compliance with APCD requirements at the time of Bid Opening in 2020. However, in late 2020, APCD rules were revised causing the two generators to now need retrofitted emissions reduction components to attain APCD compliance and approval. APCD is now also requiring Health Risk Assessments (HRAs) for both pump station sites which Carollo is undertaking via specialty subconsultant. This change order encompasses the below noted initial known costs for emissions reduction components, however it is acknowledged that there will be a subsequent change order for additional structural, mechanical, electrical, and sitework revisions necessary to implement the changes. This change order includes costs for the following assumed necessary procurement items: At Pump Station A add a Diesel Particulate Filter (DPF); and at Pump Station B add the DPF, plus Selective Catalytic Reduction (SCR) and Diesel Oxidation Catalysts (DOC) technologies.	REG
34	Bike Path Jack & Bore Concrete Debris Obstruction	On 11/11/21, about 3 pm, Anvil and their jack & bore subcontractor (Pacific Boring) encountered a concrete obstruction in the path of the 60" casing pipe. Anvil and Pacific Boring were immediately instructed to suspend the jack & bore mechanical operation and hand excavate to investigate and confirm the size and extent of the concrete obstruction. For the following 6 consecutive days (including Saturday 11/13/21 and Sunday 11/14/21), Anvil and Pacific Boring worked 8 to 10 hour shifts to hand excavate and jack hammer out the concrete obstruction, while simultaneously advancing the casing pipe about 20 ft using the hydraulic jacking equipment. On 11/18/21, the obstruction was cleared and Pacific Boring resumed normal jack & bore operations, finishing the casing installation the same day. Note that the obstruction appears to be an old Caltrans culvert structure from the original CA Route 1 highway. Also note that the jack & bore work through jurisdictional wetlands needed to proceed without delay, working through the weekend, in order to meet a California Department of Fish and Wildlife (CDFW) mandate for the tunnel to be completed by 11/19/21.	DSC

REASON FOR CHANGE CODES
CR1: City requested (required)
CR2: City requested (Optional)
E&O: Design Error or Omission
ABI: Anvil request / claim item
DSC: Differing Site Conditions
REG: Regulatory Agency Item

City of Morro Bay
Water Reclamation Facility
Lift Stations and Offsite Pipelines Project
CHANGE ORDER 003

Project:	WRF Lift Stations and OffSite Pipelines Project	**Contractor:**	Anvil Builders, Inc.
Date:	March 22, 2022	**Project Manager:**	Chris Fassari

Upon mutual acceptance and execution of this document by the City of Morro Bay (City) and Anvil Builders, Inc. (Contractor), Contractor is hereby directed to make the following changes for the consideration set forth below:

See following page(s) for Descriptions and Reasons for Change

PCO #	DESCRIPTION	Reason For Change	Amount	Contract Time (Calendar Days)
8	Additional Project Signage Costs	CR2	$ 9,196.00	0 Days
9.2	SoCal Gas Delays and Disruptions (Part 2)	ABI	$ 20,750.00	0 Days
13.1	CA-SLO-16 Work Revisions (Time Extension)	REG	$ -	153 Days
16	Reroute Joint Trench below State Waterline at 121+75	DSC	$ 144,616.00	0 Days
20	Pothole Utilities for WRF Pilot Injection Well Layout	CR2	$ 15,291.00	0 Days
32	Broken Waterline at Quintana Road and Kings Avenue	ABI	$ 6,198.00	0 Days
39	Cultural Monitor Extra Work at MTBM Launch Pit	DSC	$ 45,266.00	0 Days
	NET CHANGE ORDER ADJUSTMENT		$ 241,317.00	153 Days

ORIGINAL CONTRACT AMOUNT	$ 31,493,675.00
Previous Change Orders	$ 1,261,987.00
Previous Contract Amount	$ 32,755,662.00
Adjustments by this Change Order	$ 241,317.00
Change Order to Date	$ 1,503,304.00
New Contract Amount	$ 32,996,979.00

CURRENT FINAL COMPLETION DATE	4/3/2022
Extension Days (Calendar)	153 Days
NEW FINAL COMPLETION	9/3/2022

Acceptance of this Change Order constitutes an agreement between the City and Contractor, and the work is to be performed subject to the same terms and conditions as are contained in the Agreement with Contractor and for work on the above-mentioned project.

By signature of this Change Order, the Contractor acknowledges that the adjustments to the Contract Cost and Time contained in the Change Order are in full satisfaction and accord and so waives any right to claim any further cost and time impacts at any time during and after completion of the Contract for the changes encompassed by this Change Order.

ACCEPTED

Anvil Builders Inc.

Contractor (Company Name)

(Authorized Signature) (Date)

Chris Fassari

(Print Name and Title)

When signed by the Construction Manager, and upon execution of source document Amendment by City Council, this document becomes effective IMMEDIATELY, and Contractor shall proceed with the change(s) described above.

APPROVED

Carollo Engineers Inc / MEG Inc.

Construction Manager

Authorized Signature (Date)

Steve Mimiaga - Construction Mngr.

(Print Name and Title)

City of Morro Bay
Water Reclamation Facility
Lift Stations and Offsite Pipelines Project
CHANGE ORDER 003

Attachment 3

Project: WRF Lift Stations and OffSite Pipelines Project
Contractor: Anvil Builders, Inc.
Date: March 22, 2022

PCO	TILE	DESCRIPTION OF CHANGE	Reason For Change
8	Additional Project Signage Costs	The original contract included a $5,000 allowance for additional signage not shown on the plans or required by the specifications. Anvil has exhausted this original budget responding to signage requests from City staff to date. This change order item provides reimbursement of Anvil costs to date to provide additional signage, including custom signs, above the $5,000 allowance as directed by the City. These additional signs are deemed necessary for public safety, public information, enhanced traffic flow, and/or to enhance access to businesses open during construction.	CR2
9.2	SoCal Gas Delays and Disruptions (Part 2)	The project's joint trench, containing multiple pipelines, parallels an existing 16" diameter SoCal Gas high pressure gas main for nearly the entire alignment along Quintana Road. SoCal Gas requires a representative to be on site during all digging activities as well as other work activities occurring within 10 ft of the high pressure gas main (i.e. that could potentially damage or otherwise impact the main). There have been several occurrences where the SoCal Gas representative did not show up for scheduled assignments, which prevented Anvil from performing contract work and/or progressing the joint trench. In these cases Anvil's entire crew was forced to literally stand-by and wait for the SoCal Gas representative to arrive. The City/Carollo have spent considerable time and effort to coordinate between Anvil and SoCal Gas to improve communication and cooperation, but nevertheless, Anvil was negatively impacted on the following days: 8/25/21 for 2 hours, 8/26/21 for 3.5 hours, 9/16/21 for 1.5 hours, 10/7/21 for 2 hours. This is the second change order to reimburse Anvil for SoCal Gas monitor disruptions, the previous change order amount was $43,017.00.	ABI
13.1	CA-SLO-16 Work Revisions (Time Extension)	Anvil is provided a 153 day non-compensable time extension due to impacts caused by SHPO mandated work restriction at the Morro Creek Utility Bridge, based on the following analysis and terms: Per Anvil's approved Baseline Schedule, the Utility Bridge was to start Feb 1, 2021 with 23 days of float. Per Anvil's Feb 2022 Update, the Utility Bridge was actually started Feb 24, 2022, now with 153 days of negative float (delay). It is acknowledged that SHPO restrictions prevented Anvil from starting any work at the Utility Bridge prior to Feb 24, 2022. It is acknowledged that the on-going (thru March 2022) archeologist supervised work on site, required by SHPO, continues to impact Anvil's schedule. Direct cost impacts resulting from these circumstances are being tracked separately from this analysis. Anvil is provided the 153 calendar day non-compensable time extension at this time based on the applicable Critical Path Schedule Update negative float duration discuss herein above. Anvil has submitted a Time Impact Analysis requesting 201 calendar days. Anvil and the City agree to allow Anvil to seek additional time extensions if warranted in the future when the full extent of this on-going impact is known. The current Contract completion date is 4/3/2022 (through Amendment No. 3). With 153 calendar days added, the new Contract Completion Date will be Sept 3, 2022. The City currently views the SHPO restrictions at Utility Bridge as concurrent with other Anvil caused delays (i.e. the Pump Station A Electrical Building currently has 164 days of negative float). As such the City considers this delay as non-compensable at this time (no extended overhead merit). Similar to above, Anvil and the City agree to allow Anvil the opportunity to present substantiating documentation of extended overhead merit in the future when the full extent of this on-going impact is known.	REG
16	Reroute Joint Trench below State Waterline at 121+75	Prior to starting the Joint Trench excavation near Sta 121+75, an existing 10" State Waterline was marked incorrectly in the field by the pipeline operator. Anvil excavated (potholed) the pipeline at the location marked in the field to verify its position. The State Waterline was not found at the marked location. The pipeline operator re-marked the line again in the field, this time where shown on the Contract Drawings at Sta 121+75. A pipeline was located at this location and the pipeline operators confirmed the line as the correct pipe in the field. Anvil then began excavating the 8-ft wide by 10-ft deep Joint Trench through the area. While excavating the Joint Trench, Anvil discovered another existing pipeline running adjacent to and below the pipe previously identified as the State Waterline shown on the plans. The pipeline operator subsequently confirmed that the adjacent lower pipe was actually the State Waterline to be protected in place. This caused Anvil to have to move back, re-excavate, and deepen the Joint Trench excavation from 10 ft to approximately 14 ft deep. This would allow the Joint Trench pipelines to pass below the lower pipe with required DDW clearances. In doing so, Anvil was also required to provide additional trench shoring measures and trench dewatering for the deeper trench; then Anvil encountered additional difficulties and inefficiencies installing the Joint Trench pipelines in the deeper trench, with additional groundwater, with increased soil instabilities, and additional shoring to work around, etc. Anvil was subsequently required to also provide additional Controlled Low Strength Material (CLSM) backfill and then additional select fill compaction as well. Anvil's pipe installation operation was significantly impacted over the period from 8/4/21 to 8/16/21.	DSC
20	Pothole Utilities for WRF Pilot Injection Well Layout	Anvil provided additional potholing and utility locating at the request of the City, near Anvil's stockpile and staging area on Vistra property (along Bike Path). This additional potholing and utility locating was required to determine the best location and layout for the future Pilot Injection Well to be installed under a separate City contract, as part of the Recycled Water facilities associated with the Morro Bay "Our Water" program. At the City's direction, Anvil contacted Underground Service Alert (USA), had the area underground utilities marked by utility owners, potholed several critical utilities, backfilled and restored the area, and provided resulting survey data to the City.	CR2

City of Morro Bay
Water Reclamation Facility
Lift Stations and Offsite Pipelines Project
CHANGE ORDER 003

Attachment 3

Project: WRF Lift Stations and OffSite Pipelines Project
Contractor: Anvil Builders, Inc.
Date: March 22, 2022

PCO	TILE	DESCRIPTION OF CHANGE	Reason For Change
32	Broken Waterline at Quintana Road and Kings Avenue	On Saturday, 10/29/21, City of Morro Bay staff observed a waterline leak where the waterline crosses the Anvil trench in the intersection of Quintana Road at Kings Avenue. The City subsequently confirmed that a 6" Water line, made of Transite (AC) pipe, had deflected and come apart just beyond Anvil's trench line. Anvil had been working in this intersection the previous week and there was strong indication that Anvil activities caused the line brake. Anvil indicated their position that they have no reason to assume they caused the water line break. The City has no reason to believe that the rupture would have occurred if not for Anvil trenching across and backfilling around the existing pipe. After additional discussion and negotiation it was agreed that the City would pay a portion of the Anvil crew expenses for repairs. The settlement amount is less than half of Anvil actual costs. Note that City staff also incurred costs for various activities including temporary repairs made when the leak was first discovered.	ABI
39	Cultural Monitor Extra Work at MTBM Launch Pit	Trenching operations just north of the Microtunnel launch pit on Quintana Road near the Morro Bay Blvd Roundabout (Sta 94 to Sta 95) was significantly impacted by a known archaeological site. Anvil work was significantly impacted by instructions provided and enforced by State mandated archeological and tribal monitors assigned to the project. During trenching in the subject area, all excavated spoils were treated differently in that direct loading of trucks was not allowed without first confirming the soil was negative for resources or remains, by hand investigations performed by the archeological and tribal monitors. Anvil's trenching and shoring operation was significantly impacted over the period from 10/21/21 to 11/8/21.	DSC

REASON FOR CHANGE CODES
CR1: City requested (required)
CR2: City requested (Optional)
E&O: Design Error or Omission
ABI: Anvil request / claim item
DSC: Differing Site Conditions
REG: Regulatory Agency Item

City of Morro Bay
Water Reclamation Facility
Lift Stations and Offsite Pipelines Project
CHANGE ORDER 004

Project:	WRF Lift Stations and OffSite Pipelines Project	**Contractor:**	Anvil Builders, Inc.
Date:	June 14, 2022	**Project Manager:**	Chris Fassari

Upon mutual acceptance and execution of this document by the City of Morro Bay (City) and Anvil Builders, Inc. (Contractor), Contractor is hereby directed to make the following changes for the consideration set forth below:

See following page(s) for Descriptions and Reasons for Change

PCO #	DESCRIPTION	Reason For Change	Amount	Contract Time (Calendar Days)
11	Reroute IPR and Water Line Below Sta. 144 Culvert	DSC	$ 103,893.00	0 Days
19	Remove City's Existing Desalination Iron Media Tank	CR2	$ 54,189.00	0 Days
28.1	SLO County APCD Generator Mandates (Rescind)	REG	$ (301,703.00)	0 Days
33	Paving Repairs Near Todd's Garage	CR2	$ 6,895.00	0 Days
41	Unknown Cementitious Subgrade at South Bay Blvd	DSC	$ 26,600.00	0 Days
42	Unknown Conduits at South Bay Bvd and Quintana Road	DSC	$ 7,788.00	0 Days
49	Vistra/PG&E Easements Unknown Extra Work Items	DSC	$ 48,273.00	0 Days
	NET CHANGE ORDER ADJUSTMENT		$ (54,065.00)	0 Days

ORIGINAL CONTRACT AMOUNT	$ 31,493,675.00
Previous Change Orders	$ 1,503,304.00
Previous Contract Amount	$ 32,996,979.00
Adjustments by this Change Order	$ (54,065.00)
Change Order to Date	$ 1,449,239.00
New Contract Amount	$ 32,942,914.00

CURRENT FINAL COMPLETION DATE	9/3/2022
Extension Days (Calendar)	0 Days
NEW FINAL COMPLETION	9/3/2022

Acceptance of this Change Order constitutes an agreement between the City and Contractor, and the work is to be performed subject to the same terms and conditions as are contained in the Agreement with Contractor and for work on the above-mentioned project.

By signature of this Change Order, the Contractor acknowledges that the adjustments to the Contract Cost and Time contained in the Change Order are in full satisfaction and accord and so waives any right to claim any further cost and time impacts at any time during and after completion of the Contract for the changes encompassed by this Change Order (EXCEPT AS NOTED IN ITEM 13.1 HEREIN WHEREIN DELAY IMPACTS ARE ON-GOING).

ACCEPTED

Anvil Builders Inc.

Contractor (Company Name)

(Authorized Signature) (Date)

Chris Fassari

(Print Name and Title)

When signed by the Construction Manager, and upon execution of source document Amendment by City Council, this document becomes effective IMMEDIATELY, and Contractor shall proceed with the change(s) described above.

APPROVED

Carollo Engineers Inc / MEG Inc.

Construction Manager

Authorized Signature (Date)

Steve Mimiaga - Construction Mngr.

(Print Name and Title)

Attachment 3

City of Morro Bay
Water Reclamation Facility
Lift Stations and Offsite Pipelines Project
CHANGE ORDER 004

Project: WRF Lift Stations and OffSite Pipelines Project
Contractor: Anvil Builders, Inc.
Date: June 14, 2022

PCO	TILE	DESCRIPTION OF CHANGE	Reason For Change
11	Reroute IPR and Water Line Below Sta. 144 Culvert	The original design called for the IPR and Waterline relocation in this area to be placed above the existing stormwater culvert. After the trench was excavated, it was discovered that there was insufficient soil cover over the existing culvert to allow the IPR and Waterline to be installed over the top per Drawings. Consequently, these pipelines needed to be routed under the culvert, which increased the depth of excavations from 2 ft to 8 ft at Sta 143+99, thereby also increasing requirements for trench shoring, excavated spoils, backfill and compaction, , and potential groundwater management, between Sta 142+95 and Sta 144+95. Reference RFI #52.	DSC
19	Remove City's Existing Desalination Iron Media Tank	The City requested a quote from Anvil to remove and dispose of the existing Desalination Iron Media Tank (horizontal pressure filter) located east of Pump Station A, along Atascadero Rd. Anvils quote includes removal of the tank, tank supports, and air vacs atop the tank. Bid includes the removal of a max. of 20 CY of concrete inside the tank. Bid is based on the steel tank weighing a maximum of 55,000 lbs (once concrete is removed). Anvil will remove and replace the existing chain link with barbed wire fence; 50 LF max. Removal of adjacent piping and appurtenances (air-vacs, anchor bolts, etc.) is not included in this work.	CR2
28.1	SLO County APCD Generator Mandates (Rescind)	On 9/24/21, the City received a Notice of Incomplete Applications from SLO County Air Pollution Control District (APCD), pursuant to the Pump Station A emergency generator and the Pump Station B emergency generator. The City subsequently completed and submitted Health Risk Assessments (HRAs) at each Pump Station, as was required by APCD as part of their Notice of Incomplete Applications. After submission of the HRAs, APCD reversed its initial determination and accepted both generators without modifications. As such, the City and Anvil agree to rescind the associated previous change order for added (assumed) emissions control devices included in Amendment No. 2. Reference PCO #28.	REG
33	Paving Repairs Near Todd's Garage	The City requested that Anvil repair existing failing pavement in the City right-of-way adjacent to Anvil's Joint Trench excavation. It was determined that the damaged asphalt was not the fault of Anvil operations but rather the on-going inclement weather and existing deteriorated pavement conditions. This occurred near Todd's Garage at 972 Quintana Rd, Morro Bay. The area was re-paved 12/10/2021.	CR2
41	Unknown Cementitious Subgrade at South Bay Blvd	During Joint Trench and IPR excavation work on South Bay Blvd, the Contractor encountered cement-treated aggregate base-rock material below the existing pavement. This cementitious base material required additional effort and expenses in mechanical removal work and subsequent off-site disposal (material was not re-useable as backfill). This extra work warrants reimbursement of verified extra costs including documented labor, equipment, and other expenses on 2/1/2022, 2/3/2022, 2/4/2022, 2/5/2022, 2/10/2022, 2/11/2022, and 2/14/2022.	DSC
42	Unknown Conduits at South Bay Bvd and Quintana	During Joint Trench excavation work near the South Bay Blvd and Quintana Road intersection, the Contractor encountered and damaged unknown existing conduits which required additional effort and expenses to hand-dig around and repair. This extra work warrants reimbursement of verified extra costs including documented labor, equipment, and other expenses on 1/25/2022. The conduits were not shown on the plans or claimed by any known utility owner.	DSC
49	Vistra/PG&E Easements Unknown Extra Work Items	During the project work within PG&E/Vistra easements to date, the below noted miscellaneous unforeseen minor utility work was required for contract work to proceed. The following items are acknowledged as unforeseen conditions and as such warrant reimbursement of verified extra costs: (1) Excavate "test percolation ponds" at City request along Bike Path on 2/16/2022, (2) Unknown utilities encountered from Sta 53+00 to Sta 54+00 which impacted production on 2/16/2022, (3) Installation of exclusionary fencing along LS-2 as required by SHPO on 2/23/2022, (4) Potholing LS-2 alignment for unknown utilities not shown on plans but marked by utility companies on 3/7/2022, (5) Unforeseen concrete slab not shown on plans along LS-2 alignment impacting production on 3/22/2022, (6) Excavate around utilities not marked on plans along LS-2 alignment, 8 utilities total, between 3/17/2022 and 3/31/2022, (7) Sawcut, remove, and stockpile unknown concrete slab at Sta 21+00 of LS-2 alignment on 3/30/2022, and (8) Excavate and install 4" pipe and fittings to re-route existing Vistra waterline above LS-2 force main pipe on 4/6/2022.	DSC

REASON FOR CHANGE CODES
CR1: City requested (required)
CR2: City requested (Optional)
E&O: Design Error or Omission
ABI: Anvil request / claim item
DSC: Differing Site Conditions
REG: Regulatory Agency Item

City of Morro Bay
Water Reclamation Facility
Lift Stations and Offsite Pipelines Project
CHANGE ORDER 005

Project:	WRF Lift Stations and OffSite Pipelines Project	**Contractor:**	Anvil Builders, Inc.
Date:	August 23, 2022	**Project Manager:**	Chris Fassari

Upon mutual acceptance and execution of this document by the City of Morro Bay (City) and Anvil Builders, Inc. (Contractor), Contractor is hereby directed to make the following changes for the consideration set forth below:

See following page(s) for Descriptions and Reasons for Change

PCO #	DESCRIPTION	Reason For Change	Amount	Contract Time (Calendar Days)
13	Utility Bridge Abutment Changes	REG	$ 500,000.00	60 Days
17	Add Tracer Wire, Ground Rods, Terminal Stations	CR2	$ 108,521.00	0 Days
25	Construction Cost Escalation Increases from Vendors	DSC	$ 292,000.00	0 Days
50	DSC at South Bay & Teresa (Utilities & Bedrock)	DSC	$ 210,000.00	0 Days
52	High Level Switch Alarm Termination at Utility Bridge	CR1	$ 8,743.00	0 Days
61	City Sales Tax Increase During Project	DSC	$ 134,403.00	0 Days
	NET CHANGE ORDER ADJUSTMENT		$ 1,253,667.00	60 Days

ORIGINAL CONTRACT AMOUNT	$ 31,493,675.00
Previous Change Orders	$ 1,449,239.00
Previous Contract Amount	$ 32,942,914.00
Adjustments by this Change Order	$ 1,253,667.00
Change Order to Date	$ 2,702,906.00
New Contract Amount	$ 34,196,581.00

CURRENT FINAL COMPLETION DATE	9/3/2022
Extension Days (Calendar)	60 Days
NEW FINAL COMPLETION	11/2/2022

Acceptance of this Change Order constitutes an agreement between the City and Contractor, and the work is to be performed subject to the same terms and conditions as are contained in the Agreement with Contractor and for work on the above-mentioned project.

By signature of this Change Order, the Contractor acknowledges that the adjustments to the Contract Cost and Time contained in the Change Order are in full satisfaction and accord and so waives any right to claim any further cost and time impacts at any time during and after completion of the Contract for the changes encompassed by this Change Order (EXCEPT AS NOTED IN ITEM 13.1 HEREIN WHEREIN DELAY IMPACTS ARE ON-GOING).

ACCEPTED

Anvil Builders Inc.

Contractor (Company Name)

(Authorized Signature) (Date)

Chris Fassari

(Print Name and Title)

When signed by the Construction Manager, and upon execution of source document Amendment by City Council, this document becomes effective IMMEDIATELY, and Contractor shall proceed with the change(s) described above.

APPROVED

Carollo Engineers Inc / MEG Inc.

Construction Manager

8/23/2022

Authorized Signature (Date)

Steve Mimiaga - Construction Mngr.

(Print Name and Title)

Attachment 3

City of Morro Bay
Water Reclamation Facility
Lift Stations and Offsite Pipelines Project
CHANGE ORDER 005

Project: WRF Lift Stations and OffSite Pipelines Project
Contractor: Anvil Builders, Inc.
Date: August 23, 2022

PCO	TILE	DESCRIPTION OF CHANGE	Reason For Change
13	Utility Bridge Abutment Changes	Anvil is reimbursed and compensated for extra work associated with SHPO mandated work revisions including: (1) revising trenching and finish grade requirements between Atascadero Road and the North Bridge Abutment, (2) revised slide rail shoring at both Bridge Abutment excavations, (3) mandated dewatering systems regardless of groundwater level/status, (3) and Archeologist supervised excavations with severely impacted excavation operations throughout the entire CA-SLO-16 zone. Anvil is provided a 60 day non-compensable time extension through 11/2/2022. Anvil and the City agree to allow Anvil to present substantiating documentation of associated extended overhead impacts for incorporation in a future Amendment.	REG
17	Add Tracer Wire, Ground Rods, Terminal Stations	Anvil is reimbursed and compensated for extra work associated with adding Tracer Wire on all project pipelines that are not located in a Joint Trench. This includes: 7 segments of IPR line, 2 segments of BR line, and 4 segments of Relocated Waterlines. Anvil shall provide Tracer Wire starting and/or ending terminals (Tracer Wire Test Stations per Std Det 2060 and Ground Rods per Std Det 16410). Anvil shall also provide Tracer Wire Test Stations at approximately 500' intervals throughout all associated tracer wire systems.	CR2
25	Construction Cost Escalation Increases from Vendors	Anvil is reimbursed and compensated for construction cost escalation increases from specific vendors resulting from the unprecedented COVID-19 caused inflation. The reimbursement is based on several specific vendors including: Aegion for special HDPE fusing, P&F Distributors for piping materials, Big Wakoo for fencing, Pacific Steel Group for rebar, R&B for construction materials, David Crye for trucking, JB Dewar for diesel fuel, and SC Fuels for diesel fuel. The compensation amount represents a 50/50 settlement split with Anvil.	DSC
50	DSC at South Bay & Teresa (Utilities & Bedrock)	Anvil is reimbursed and compensated for extra work associated with differing site conditions (DSC) encountered while installing project pipelines through the intersection of South Bay Blvd and Teresa Road including significant impacts for unknown bedrock over about 100-ft of trenching. This change item also includes impacts for utility conflicts encountered including for AT&T, SoCal Gas, State Water, City Water, and City Sewer. This change item also includes costs to remove and replace segments of existing City Sewer pipe and City Water pipe that were in poor condition and failing due to the adjacent bedrock excavation operations.	DSC
52	High Level Switch Alarm Termination at Utility Bridge	Anvil is reimbursed and compensated for extra work associated with eliminating the PLC at the Utility Bridge. The PLC only operated a flood sensor. The flood sensor will now be connected to the PLC at Pump Station A via added twisted shielded pair (control wire) running in one of the innerducts in the 4" FO conduit. The purchased PLC, solar panel, and other related equipment will be provided to the City as spare parts.	CR1
61	City Sales Tax Increase During Project	Anvil is reimbursed and compensated for extra costs associated with the City raising local Sales Tax by 1% effective 4/1/2021, essentially just after Anvil started working on the project. This settlement amount is calculated to reflect 1% of all goods and materials purchased within the City and delivered to the site.	DSC

REASON FOR CHANGE CODES
CR1: City requested (required)
CR2: City requested (Optional)
E&O: Design Error or Omission
ABI: Anvil request / claim item
DSC: Differing Site Conditions
REG: Regulatory Agency Item

AGENDA NO: C-2

MEETING DATE: November 22, 2022

Staff Report

TO: **Honorable Mayor and City Council** **DATE: November 8, 2022**

FROM: **Scot Graham, Community Development Director**
Cindy Jacinth, Senior Planner

SUBJECT: **Adoption of Ordinance 654: Amendments to Morro Bay Municipal Code, Repealing Title 17 and Replacing with Adoption of Zoning Code/ Coastal Implementation Plan (IP) and associated Waterfront Master Plan and Municipal Code Amendments.**

RECOMMENDATION

Staff recommends the City Council consider adoption, by second reading and by title only with further reading waived, of Ordinance No. 654 "An Ordinance of the City Council of the City of Morro Bay, California, repealing and replacing Title 17 (Zoning), and miscellaneous amendments to update zoning language references in page 5-3 of the Waterfront Master Plan and Chapters 5.50, 5.60, 7.16, 8.32, 9.28, 10.60, 12.08, 12.12, 13.04, 13.20, 14.44, 14.42, 16.36, 16.40, and 16.48 of the Morro Bay Municipal Code; and direct staff to submit an application for LCP amendment to the California Coastal Commission for certification.

DISCUSSION / BACKGROUND:

At the October 25, 2022 meeting, the City Council voted to introduce Ordinance 654 for adoption and first reading. The Council accepted the Planning Commission's September 20, 2022 recommendation reflected in PC resolution 08-22 with one change to commercial downtown heights which would allow for up to 37 feet instead of 30 feet (Zoning Code section 17.08.030). The final Zoning Code/Implementation Plan reflects the Council action and is available at the link below. The Zoning Code update also includes text amendment to page 5-3 of the Waterfront Master Plan; and miscellaneous amendments to Chapters 5.50, 5.60, 7.16, 8.32, 9.28, 10.60, 12.08, 12.12, 13.04, 13.20, 14.44, 14.42, 16.36, 16.40, and 16.48 of the Morro Bay Municipal Code.

CONCLUSION

Staff recommends the City Council consider adoption, by second reading and by title only with further reading waived, of Ordinance No. 654 "An Ordinance of the City Council of the City of Morro Bay, California, repealing and replacing Title 17 (Zoning), and miscellaneous amendments to update zoning language references in page 5-3 of the Waterfront Master Plan and Chapters 5.50, 5.60, 7.16, 8.32, 9.28, 10.60, 12.08, 12.12, 13.04, 13.20, 14.44, 14.42, 16.36, 16.40, and 16.48 of the Morro Bay Municipal Code;" and direct staff to submit an application for LCP amendment to the California Coastal Commission for certification.

ATTACHMENT

1. Ordinance 654

Prepared By: __SG/CJ ___ Dept Review: __SG_____

City Manager Review: _ SC City Attorney Review: __LNL_

ONLINE LINK:

1. Final Zoning Code and Zoning Map, dated November 2022: www.morrobayca.gov/planmb
   Zoning Code/IP Document specific location:
   http://morrobayca.gov/DocumentCenter/View/17256/2022-Zoning-Code_IP
   Zoning Map specific location:
   http://morrobayca.gov/DocumentCenter/View/17002/Proposed-Zoning-Map-Update

ORDINANCE NO. 654

AN ORDINANCE OF THE CITY COUNCIL OF THE CITY OF MORRO BAY, CALIFORNIA, REPEALING AND REPLACING TITLE 17 (ZONING), AND MISCELLANEOUS AMENDMENTS TO UPDATE ZONING LANGUAGE REFERENCES IN PAGE 5-3 OF THE WATERFRONT MASTER PLAN AND CHAPTERS 5.50, 5.60, 7.16, 8.32, 9.28, 10.60, 12.08, 12.12, 13.04, 13.20, 14.44, 14.42, 16.36, 16.40, AND 16.48 OF THE MORRO BAY MUNICIPAL CODE

THE CITY COUNCIL
City of Morro Bay, California

WHEREAS, duly noticed public hearings for the Zoning Code / Coastal Implementation Plan (IP) Update of Plan Morro Bay were held by Planning Commission on August 16, 2022, September 6, 2022, September 20, 2022; and

WHEREAS, the Planning Commission of the City of Morro Bay conducted a hybrid public hearing both in-person at 209 Surf Street, Morro Bay, and via video conference on September 20, 2022 for the purpose of considering a favorable recommendation to the Morro Bay City Council for adoption of the Zoning Code Update as part of the Plan Morro Bay project, and forwarded a favorable recommendation with adoption of Planning Commission 08-22; and

WHEREAS, pursuant to State CEQA guidelines, a Program Environmental Impact Report (EIR) for the Plan Morro Bay project was prepared, released for a 45-day public review process on October 19, 2020 to December 4, 2020 and certified by the City Council on May 25, 2021 (State Clearinghouse number 2021111026); and

WHEREAS, the proposed Zoning Code / Coastal Implementation Plan update project implements the General Plan/ Local Coastal Plan (LCP) Coastal Land Use Plan which was considered through a programmatic EIR review and that document provides a programmatic review of the potential impacts associated with implementation of the overall Plan Morro Bay project; and

WHEREAS, State CEQA Guidelines Section 15162 provides that no further review is required under CEQA when there are no substantial changes in the Project, and there are no substantial changes with respect to the circumstances under which the Project is undertaken, and there is no new information of substantial importance, which was not known and could not have been known at the time of certification of the EIR; and

WHEREAS, the proposed Zoning Code/ IP Update Amendment is consistent with and implements the General Plan / LCP Coastal Land Use Plan and is consistent with the analysis presented in the EIR and therefore, pursuant to State CEQA Guidelines Section 15162, no subsequent analysis is required; and

WHEREAS, upon adoption of the Zoning Code / IP, certain miscellaneous amendments will be required in both the 1996 Waterfront Master Plan adopted by Council Resolution 43-96

and several other Municipal Code amendments to update Zoning language references for consistency; and

WHEREAS, the City Council of the City of Morro Bay (the "City") conducted a hybrid public hearing both in-person at the Morro Bay Veteran's Hall at 209 Surf Street and via video conference on October 25, 2022, for the purpose of considering the favorable recommendation by the Planning Commission and for purposes of adoption of the Zoning Code / Coastal Implementation Plan (IP) Update of Plan Morro Bay and finding that no further environmental review is necessary pursuant to CEQA State Guidelines Section 15162; and

WHEREAS, the City Council of the City of Morro Bay (the "City") conducted a hybrid meeting both in-person at the Morro Bay Veteran's Hall at 209 Surf Street and via video conference on November 22, 2022, to adopt Ordinance 654 by second reading and by title only with further reading waived, and direct staff to submit an application for Local Coastal Program (LCP) amendment to the California Coastal Commission for certification; and

NOW, THEREFORE, THE CITY COUNCIL OF THE CITY OF MORRO BAY DOES ORDAIN AS FOLLOWS:

SECTION 1. The City Council of the City of Morro Bay finds:

A. The above referenced recitals are true and correct and material to the adoption of this Ordinance and are incorporated herein by reference.

B. The proposed Zoning Ordinance will not be injurious or detrimental to the health, safety, comfort, general welfare, or well-being of the persons residing or working in the neighborhood.

C. The Local Coastal Plan Implementation Plan Amendments are intended to further the goals of the California Coastal Act, as set forth in Section 30001.5 of the Public Resources Code, to:

1. Protect, maintain, and where feasible, enhance and restore the overall quality of the coastal zone environment and its natural and artificial resources.

2. Assure orderly, balanced utilization and conservation of coastal zone resources taking into account the social and economic needs of the people of the state.

3. Maximize public access to and along the coast and maximize public recreational opportunities in the coastal zone consistent with sound resources conservation principles and constitutionally protected rights of private property owners.

4. Assure priority for coastal-dependent and coastal-related development over other development on the coast.

5. Encourage state and local initiatives and cooperation in preparing procedures to

implement coordinated planning and development for mutually beneficial uses, including educational uses, in the coastal zone.

D. Pursuant to Morro Bay Municipal Code Section 17.64.080, no amendment to the Zoning Ordinance shall be legally effective in the coastal zone until the amendment is certified by the Coastal Commission. If the Coastal Commission certifies this Ordinance conditioned on substantive changes being made, then the Council will consider the introduction and adoption of another ordinance to incorporate those substantive changes. If the Coastal Commission certifies this Ordinance conditioned on non-substantive changes being made to this Ordinance, then the City Clerk is authorized to amend this Ordinance to reflect those non-substantive changes.

SECTION 2. Title 17 (Zoning) of the Morro Bay Municipal Code is hereby repealed in its entirety upon both final certification by the California Coastal Commission, as well as the effective date as an operation of law, of a new Title 17 of the Morro Bay Municipal Code, in a form substantially similar to the Zoning Code / IP located on the City's Plan Morro Bay website www.morrobayca.gov/planmb with the Zoning Code/IP document specifically located at http://morrobayca.gov/DocumentCenter/View/17256/2022-Zoning-Code_IP and the Zoning Map specifically located at http://morrobayca.gov/DocumentCenter/View/17002/Proposed-Zoning-Map-Update. Non-substantive/typographical changes to the Zoning Code replacement at www.morrobayca.gov/planmb may be authorized by the City Attorney; no material changes beyond typographical corrections may be made prior to second reading.

SECTION 3. Section 5.50.120.C.1 of the Morro Bay Municipal Code is amended to read as follows:

C. Location Restrictions.

1. No retail operation shall locate or operate in any zone of the city of Morro Bay, other than in the community commercial (CC) district, the district commercial (DC) district, or the industrial-general IG) district.

SECTION 4. Section 5.50.130.C.1 of the Morro Bay Municipal Code is amended to read as follows:

C. Location Restrictions.

1. No distribution operation shall locate or operate in any zone of the city of Morro Bay, other than in the community commercial (CC) district, the district commercial (DC) district, or the industrial-general IG) district.

SECTION 5. Section 5.60.010.H of the Morro Bay Municipal Code is amended to read as follows:

H. "Residential district" means any area zoned as a Residential District in Title 17 of the municipal code or any other area with exclusively residential uses.

SECTION 6. Section 7.16.040.A of the Morro Bay Municipal Code is amended to read as follows:

A. Except as otherwise permitted in this chapter, no person shall own, keep, maintain, stake or pasture any bovine, swine, sheep, goat, horse or other livestock upon any premises in the city unless the lot or parcel size is a minimum twenty thousand square feet or, the parcel is in a properly zoned agricultural district in which case the number of animals shall not exceed the maximum density allowed for such animals pursuant to Section 17.30.060 of this code.

SECTION 7. Section 8.32.180 of the Morro Bay Municipal Code is amended to read as follows:

Filming shall not be permitted under any circumstances in any environmentally sensitive habitat as identified pursuant to Section 17.14.080 of this code.

SECTION 8. Section 9.28.030 of the Morro Bay Municipal Code is amended to read as follows:

The following acts, among others, are declared to be loud, disturbing, and unnecessary noises in violation of this section, but said enumeration shall not be deemed to be exclusive, namely:

A. Horns, Signaling Devices, Etc. The sounding of any horn or signaling device on any automobile, motorcycle, or other vehicle on any street or public place of the city except as a danger warning; the creation by means of any such signaling device of any unreasonably loud or harsh sound; and the sounding of any such device for an unnecessary and unreasonable period of time. The use of any signaling device except one operated by hand or electricity; the use of any horn, whistle or other device operated by engine exhaust; and the use of any such signaling device when traffic is for any reason held up.

B. Radios, Phonographs, Etc. The using, operating, or permitting to be played, used or operated any radio receiving set, television set, musical instrument, phonograph or other machine or device for the producing or reproducing of sound in such a manner as to disturb the peace, quiet, and comfort of the neighboring inhabitants or at any time with louder volume than is necessary for convenient hearing for the person or persons who are in the room, vehicle or chamber in which such machine or device is operating and who are voluntary listeners thereto. The operation of any such set, instrument, phonograph, machine, or device between the hours of seven p.m. and seven a.m. in a residential district or between two a.m. and seven a.m. in a nonresidential district in such a manner as to be plainly audible at a distance of fifty feet from the building, structure, or vehicle in which it is located shall be prima facie evidence of a violation of this section.

C. Live Music. Amplified music, being performed by any live band of two or more persons or by any solo performer between the hours of seven p.m. and seven a.m. in a residential district or between two a.m. and seven a.m. in a nonresidential district, in such a manner as to be plainly audible at a distance of fifty feet from the building or structure in which it is located shall be prima facie evidence of a violation of this section.

D. Loud Speakers, Amplifiers for Advertising. The using, operating, or permitting to be played, used, or operated of any radio receiving set, musical instrument, phonograph, loudspeaker, sound amplifier, or other machine or device for the producing or reproducing of sound which is cast upon the public streets for the purpose of commercial advertising or attracting the attention of the public to any building or structure for commercial purposes.

E. Yelling, Shouting, Etc. Yelling, shouting, hooting, whistling, or singing on the public streets between the hours of two a.m. and seven a.m. in a nonresidential district or at any place in a residential district between the hours of seven p.m. and seven a.m. for an unnecessary,

unreasonable period of time so as to annoy or disturb the quiet, comfort or repose of persons in any dwelling, hotel or other type of residence or of any persons in the vicinity.

F. Steam Whistles. The blowing of any locomotive steam whistle or steam whistle attached to any stationary boiler except to give notice of the time to begin or stop work or as a warning of fire or danger, or upon request of proper city authorities.

G. Exhausts. The discharge into the open air of the exhaust of any steam engine, stationary internal combustion engine, motor boat, or motor vehicle except through a muffler or other device which will effectively prevent loud or explosive noises therefrom.

H. Loading, Unloading, Opening Boxes. The creation of a loud and excessive noise in connection with loading or unloading any vehicle or the opening and destruction of bales, boxes, crates, and containers.

I. Construction or Repairing of Buildings. The erection (including excavating), demolition, alteration or repair of any building or general land grading and contour activity using equipment in such a manner as to be plainly audible at a distance of fifty feet from the building other than between the hours of seven a.m. and seven p.m. on weekdays and eight a.m. and seven p.m. on weekends except in case of urgent necessity in the interest of public health and safety, and then only with a permit from the community development department, which permit may be granted for a period not to exceed three days or less while the emergency continues and which permit may be renewed for a period of three days or less while the emergency continues. If the building inspector should determine that the public health and safety will not be impaired by the erection, demolition, alteration and repair of any building or the excavation of streets and highways within the hours of seven p.m. and seven a.m. on weekdays and seven p.m. and eight a.m. on weekends and if he further determines that loss or inconvenience would result to any party in interest, he may grant permission for such work to be done within the hours of seven p.m. and seven a.m. on weekdays and seven p.m. and eight a.m. on weekends upon application being made at the time the permit for the work is awarded or during the progress of the work.

J. Schools, Courts, Churches, and Hospitals. The creation of any excessive noise other than that resulting from construction or excavation work on any street adjacent to any school, institution of learning, church or court while the same are in use, or adjacent to any hospital, which unreasonably interferes with the workings of such institution, or which disturbs or unduly annoys patients in the hospital, provided conspicuous signs are displayed in such streets indicating that the same is a school, hospital or court street.

K. Pile Drivers, Hammers, Etc. The operation between the hours of seven p.m. and seven a.m. of any pile driver, steam shovel, pneumatic hammer, derrick, steam or electric hoist or other appliance, the use of which is attended by loud or unusual noise except in case of urgent necessity in the interest of public health and safety, and then only with a permit from the building inspector or the director of public services authorizing such devices to be operated during the otherwise prohibited hours while the emergency continues.

L. Blowers and Motor-driven Cycles. The operating of any noise-creating blower or power fan or any cycle powered by an internal combustion engine, the operation of which causes noise due to the explosion of operating gases or fluids, unless the noise from such blower or fan is properly muffled and such engine is equipped with a muffler device sufficient to reduce such noise to a level which will not disturb the surrounding neighborhood. The noise limits set forth in Section 23130 of the California Vehicle Code shall be deemed to be the applicable standard for noise emissions; provided, however, the basis for measuring such limits for devices operated on private property shall be a distance of fifty feet from the property line of the parcel of real property on which the device is located or where the neighboring property

is lawfully devoted to residential complies with the required yard setbacks as established in the zoning regulations for the applicable district.

SECTION 9. Section 10.60.020 of the Morro Bay Municipal Code is amended to read as follows:

At intersections not controlled by a stop sign or traffic signal, no plant, structure, or other solid object over three feet high (above adjacent curb) which would obstruct visibility may be located within the area indicated in Section 17.23.180 of the zoning regulations. At controlled intersections, the city engineer may determine visibility requirements for proper sight distance.

SECTION 10. Section 12.08.080 of the Morro Bay Municipal Code is amended to read as follows:

Any person aggrieved by the determination of the public works director may file an appeal to the planning commission following the payment of the applicable fee. A public hearing shall be held following public notice of property owners within three hundred feet per Section 17.36.060. Said public notice shall also include posting of the subject tree(s) with two placards that are clearly visible indicating the purpose, time, date, and location of the hearing.

The appellant shall submit a report prepared by a certified arborist or landscape architect describing the condition of the tree(s) and the reason(s) for the removal of the tree(s) from the public right-of-way. Trees shall not be removed solely for the preservation of private views.

A tree(s) shall not be removed unless authorized by the proper review authority within the scope of a construction project. Said removal shall be appropriately mitigated on a not less than two-to-one tree replacement. Said tree(s) shall be maintained in a healthy, live condition for a period of five years.

Following the public hearing, the planning commission shall grant or deny the appeal. The granting of the appeal by the planning commission may be subject to conditions deemed appropriate to mitigate the impacts to the community and neighborhood due to the removal of the tree(s). Any person aggrieved by the decision of the planning commission may file an appeal to the city council. The city council shall then conduct a public hearing under the same provisions as stated above.

SECTION 11. Section 12.12.060.E.2 of the Morro Bay Municipal Code is amended to read as follows:

2. Appeals on Major WTFPs shall proceed as provided in accordance with the appeal provisions in Title 17 of the Municipal Code, Section~~s~~ 17.36.130 (Appeals). The appellate authority may hear the appeal de novo.

SECTION 12. Section 13.04.020.K of the Morro Bay Municipal Code is amended to read as follows:

K. Licensed Health Care Facility. "Licensed health care facility" means, for the sole and exclusive purpose of this chapter, any facility meeting the definition of a "health facility" set forth in Section 1250 of the state of California Health and Safety Code. This definition shall also include any "residential care facility" as defined under Section 1502(a)(1) of the state of California Health and Safety Code so long as all of these facilities are located on the same property, are under common ownership and are served by the same water meter or meters as a "health care facility" as defined by Health and Safety Code Section 1250.

SECTION 13. Section 13.20.080.B.5 of the Morro Bay Municipal Code is amended to read as follows:

5. Family day care homes, as defined in Section 17.53.010 of this code, as may be amended.

SECTION 14. Sections 14.44.020.A and B of the Morro Bay Municipal Code are amended to read as follows:

Property owners and/or applicants for development permits shall at their own expense design, construct and install frontage improvements consisting of curb, gutters, thru-curb drains, sidewalks, street, and street trees along the entire frontage of the subject property and/or shall correct existing deficiencies in them pursuant to the following provisions:

A. Such improvements shall be constructed by owner/applicant on all properties within commercial and mixed-use, industrial, residential medium density (RM), or residential high density (RH) districts within the city.

B. Sidewalk improvements shall not be required for properties within the residential low density (RL) or residential single unit (RS) districts on which a single-family home is being constructed or altered.

SECTION 15. Section 14.42.060.A of the Morro Bay Municipal Code is amended to read as follows:

A. The building division shall adopt an administrative, nondiscretionary review process for the department to expedite approval of small residential rooftop solar energy systems within thirty days of the adoption on this chapter. The department shall issue a building permit or other nondiscretionary permit the same day for over-the-counter applications or within three business days for electronic applications of receipt of a complete application and meets the requirements of the approved checklist and city standard plan. The building official may require an applicant to apply for a use permit if the official finds, based on substantial evidence, that the solar energy system could have a specific, adverse impact upon the public health and safety. Such decisions may be appealed to the city planning commission per Section 17.36.130 of this code, except references to "director" shall instead refer to the "building official."

SECTION 16. Section 14.42.060.C of the Morro Bay Municipal Code is amended to read as follows:

C. If a use permit is required, the building official may deny an application for the use permit if the official makes written findings based upon substantive evidence in the record that the proposed installation would have a specific, adverse impact upon public health or safety and there is no feasible method to satisfactorily mitigate or avoid, as defined, the adverse impact. Such findings shall include the basis for the rejection of the potential feasible alternative for preventing the adverse impact. Such decisions may be appealed to the city planning commission per Section 17.36.130 of this code, except references to "director" shall instead refer to the "building official."

SECTION 17. Section 16.36.010 of the Morro Bay Municipal Code is amended to read as follows:

The layout of streets and lots within a subdivision shall be consistent with the densities and types of uses authorized by the general plan, specific plans, and zoning. The subdivision design shall also recognize the physical conditions of the site, such as slope, soil types, and adjacent land use, which may further limit uses of the property. The subdivider must simultaneously consider such factors as terrain, development objectives, and options available under these regulations in order to design a subdivision which best meets the needs of those who will occupy it as well as the community as a whole.

The subdivider must also consider the RS district is intended to provide a single-unit residential area free of disturbing noises, excessive traffic, and hazards created by moving automobiles. The RS district is designed to prevent burdens on the public facilities, including sewer, water, electricity and schools by an influx and increase of people to a degree larger than the city's limits, tax base or financial capabilities can reasonably and responsibly accommodate. The RS district affords protection from deleterious environmental effects and serves to maintain and protect the existing character of the residential neighborhood.

SECTION 18. Section 16.36.050.A of the Morro Bay Municipal Code is amended to read as follows:

A. In general, subdivisions shall be designed to be compatible with existing lots, residences, and zoning in their vicinity. Subdivisions are to be built, to the extent possible, to foster the appearance of neighborhoods with houses facing one another across public streets, cottage designs and garden courts. Except as otherwise allowed pursuant to State law or any other part of this code, minimum lot sizes shall be as established in the tables below for the underlying zoning district for which a subdivision or other action pursuant to this Title is proposed.

Minimum Lot Size by District	
Zoning	(Lot size - sq. ft.)
RL	5,000
AG	20,000
RS	5,000
RM	5,000
RH	5,000
All Commercial and Mixed-Use and Industrial Zones	6,000

SECTION 19. Chapter 16.40 of the Morro Bay Municipal Code, Compact In-Fill Developments is deleted in its entirety.

SECTION 20. Section 16.48.030 of the Morro Bay Municipal Code is amended to read as follows: The procedures and standards contained in this chapter shall govern all condominium and conversion projects. Commercial and industrial condominium projects may be exempt from the provisions intended to govern residential living units. Detached residential condominium projects shall be subject to the same criteria for Small Lot Single-Unit Development, Section 17.07.040.D.

SECTION 21. CEQA Findings. Pursuant to State CEQA guidelines, a Program EIR for the Plan Morro Bay project was prepared, released for a 45-day public review process on October 19,

2020 to December 4, 2020 and certified by the City Council on May 25, 2021 (State Clearinghouse number 2021111026). The proposed Zoning Code / Coastal Implementation Plan update project implements the General Plan/ LCP which was considered through the programmatic EIR review referenced above. That document provides a programmatic review of the potential impacts associated with implementation of the overall Plan Morro Bay project. State CEQA Guidelines Section 15162 provides that no further review is required under CEQA when there are no substantial changes in the Project, there are no substantial changes with respect to the circumstances under which the Project is undertaken, and there is no new information of substantial importance, which was not known and could not have been known at the time of certification of the EIR. The proposed Zoning Code/ IP Update Amendment is consistent with and implements the General Plan/ LCP Coastal Land Use Plan and is consistent with the analysis presented in the EIR and therefore, pursuant to State CEQA Guidelines Section 15162, no subsequent analysis is required.

SECTION 22. Severability. If any section, subsection, phrase, or clause of this ordinance or any part thereof is for any reason held to be unconstitutional or otherwise unenforceable, such decision shall not affect the validity of the remaining portions of this ordinance or any part thereof. The City Council hereby declares that it would have passed this ordinance and each section, subsection, phrase or clause thereof irrespective of the fact that any one or more sections, subsections, phrases, or clauses be declared unconstitutional or otherwise unenforceable.

SECTION 23. Effective Date. This Ordinance shall take effect 30 days after its adoption and upon certification required as an operation of law.

SECTION 24. Certification. The City Clerk shall certify as to the passage and adoption of this Ordinance and shall cause the same to be posted as the designated locations in the City of Morro Bay.

INTRODUCED at a regular meeting of the City Council held on the 25TH day of October 2022, by motion of Mayor Headding and seconded by Council Member Addis.

PASSED AND ADOPTED on the 22nd day of November, 2022, by the following vote:

AYES:
NOES:
ABSENT:
ABSTAIN:
RECUSE:

_____
JOHN HEADDING, Mayor

ATTEST:

_____
DANA SWANSON, City Clerk

APPROVED AS TO FORM:

_____
CHRIS F. NEUMEYER, City Attorney

STATE OF CALIFORNIA)
COUNTY OF SAN LUIS OBISPO)
CITY OF MORRO BAY)

I, Dana Swanson, City Clerk for the City of Morro Bay, California, do hereby certify that the foregoing Ordinance No. 654 was duly passed and adopted by the City Council of the City of Morro Bay at the regular meeting thereof, held on the 22nd day of November 2022, by the following vote:

AYES:
NOES:
ABSENT:
RECUSED:

IN WITNESS WHEREOF I have hereunto set my hand and affixed the official seal of the City of Morro Bay, California, this _____ day of _____, 2022.

_____
DANA SWANSON, City Clerk

AGENDA NO: C-3
MEETING DATE: November 22, 2022

Staff Report

TO: **Honorable Mayor and City Council** **DATE: November 17, 2022**

FROM: **Scott Collins, City Manager**
Eric Endersby, Harbor Director

SUBJECT: **Presentation of Harbor Department Organizational Assessment Report and Consideration of Resolution No. 102-22 Authorizing the Addition of (1) Harbor Patrol Officer Position, and Approving the Associated Budget Amendment for Fiscal Year 2022/23**

RECOMMENDATIONS

Staff recommends the City Council:

1. Receive and file the Harbor Department Organizational Assessment report completed by The Center for Organization Effectiveness (TCFOE), and
2. Adopt Resolution No. 102-22, adding an additional Harbor Patrol Officer (HPO) position to the Fiscal Year 2022/23 Budget, and approving the necessary Budget amendment for addition of that position.

ALTERNATIVES

Delay approving the HPO position until the new Harbor Director is hired. Staff have, however, serious concern about short-staffing fatigue and ability to respond safety and appropriately to public safety incidents and emergencies.

FISCAL IMPACT

The increased cost for the added FTE requires a budget amendment of $69,285. for salary and benefits for the remainder of FY 2022/23. There are sufficient funds in fund balance to cover this new position in FY 2022/23 and moving forward on an ongoing basis (more information is provided on the fiscal impact in the “discussion” section of this report).

BACKGROUND

Morro Bay’s waterfront, harbor and beaches are an enterprise fund zone held in trust with the State of California as the Morro Bay Tidelands Trust, and the Harbor Department is the department designated by the City to manage these assets and provide services within the Trust. The most visible of these services are the public safety, facility management and public access/environmental protection missions of the Harbor Patrol. Lesser known, but equally important, is the property management role of the Harbor Department, where all of the businesses on the west side of Embarcadero are on public property lease sites subject to the public overview under the Tidelands Trust. The third “leg” of the Harbor Department is its capital and maintenance/repair responsibilities or various and numerous pieces of important public and other infrastructure.

Prepared By: __EE/SC____	**Dept Review: ___EE___**
City Manager Review: ___SC_____	**City Attorney Review: ___LNL___**

Harbor Department Staffing and Organizational Structure History

When the Harbor Department was created as a stand-alone department in the mid-1980's, there were initially five full-time personnel:

1. A department head focused primarily on lease and property management
2. An administrative assistant to manage the front public office and perform basic administrative functions of the department
3. A patrol supervisor to oversee the public safety functions of harbor patrol and beach lifeguards, in addition to department maintenance
4. Two full-time patrol officers to perform the various patrol and maintenance functions and duties

Several years later, duties and workload justified a third patrol officer position be added, bringing the full-time total to six. This was at a time when tourism was mostly a summer and weekend phenomena, water activity on the bay and ocean consisted of commercial and recreational fishers and the occasional visiting sailboat.

As needs, duties, and expectations changed, by the early 2000's the full-time personnel count increased to eight:

1. A department head, still focused primarily on lease and property management
2. A business coordinator to assist the department head in higher-level lease and property functions, in addition to running the "business" side of the department
3. An administrative assistant to manage the front public office and perform basic administrative functions of the department
4. A patrol supervisor to oversee the public safety and maintenance functions, which position was elevated in the mid-2000's to a management position in recognition increased duties and responsibilities
5. Four patrol officers

In 2010, the former department head retired and, because we were in the throes of the Great Recession and revenues City-wide were down significantly, it was decided the Harbor Department would go without replacing the department head position, and instead be managed jointly by the operations manager and the business coordinator, who was elevated to a manager position, and addition of a part-time business coordinator position to backfill some of those duties.

Sadly, the business manager passed in 2012, and the department was again thrown into another reorganization. This iteration consisted of:

1. A department head, where the operations manager was elevated to that position
2. Recruiting for a new business manager position to focus primarily on lease management
3. A business coordinator position, focused on running the business side of the department
4. An office assistant for the front office and administrative duties
5. A new patrol supervisor position, promoted from the ranks of the patrol officers, but with no backfilling of the vacated patrol position
6. Three patrol officer positions

This would have brought the department back to eight full-time positions, however, due to the Morro Bay Power Plant announcing it was closing several years earlier than planned, which meant the loss of the $275,000 plant outfall lease revenues to the Harbor Fund, the new business manager position was eliminated as it was being recruited.

Finally, in 2016, the incumbent office assistant retired and the position was filled, but after two years that person moved to another department, and the position was filled with an interim half-time person. Then, in late 2019, that half-time person moved on to the private sector, the COVID-19 pandemic hit shortly thereafter, and the position was not filled either part- or full-time, due to the economic uncertainties of the pandemic, leaving the department with six full-time personnel to continue carrying the increasing workload of what used to be covered by an 8-person staff.

It is generally recognized there are certain functions of the department that cannot be done efficiently, adequately, safely, and to the degree the community expects and demands, both administratively and operationally, with six full-time staff. This has been especially true in recent years with lease management, despite a new Lease Management Policy being adopted in 2020 with the Council and community expectation it would lead to more effective lease management operations. At the adoption of the Lease Management Policy, City Council directed staff to identify mechanisms to enhance the City's lease management capacity.

In December 2021, TCFOE conducted two days of Executive Team-building for the City. TCFOE is a joint powers authority that sprang out of San Diego government focusing on training, coaching, and consulting services to hundreds of public sector and community-oriented organizations throughout California and beyond.

In 2022, the City further contracted with TCFOE to provide consulting support in the form of an organization assessment of the Tideland Trust Lease Management approach. Because Harbor Department staffing is two positions down from where it was 12 years ago, and with the pending retirement of the current Harbor Director, after initial review of the approach, the TCFOE team, with City concurrence, broadened the assessment to the full Harbor Department as a unique opportunity to move the department into a successful future.

The focus of the assessment was to review workload demands and the structure of the organization and staffing levels to determine opportunities for operational efficiencies and effectiveness moving forward in order to meet the needs and expectations of the community.

DISCUSSION

TCFOE Assessment Purpose and Methodology

TCFOE's assessment included in-depth interviews with Harbor Department staff and other City staff who engage regularly with the Harbor/waterfront, as well as external stakeholders. TCFOE shadowed Harbor Department staff through the regular course of their operations and duties. They further conducted an internal analysis of operations and developed an initial evaluation with discussion of possible next steps.

They also provided change management and consulting services to assist the Harbor Director and the City Manager in developing strategies and implementation of recommendations. The full report is provided as Attachment 1 and summarized below:

TCFOE Assessment Findings

Stakeholder interviews revealed the following four core themes:

- Facilities
  - There is significant backlog of deferred maintenance and insufficient funding to address the needs
- Operations
  - Limited staff and need to collaborate more across departments
- Organization structure and staffing
  - Dedicated and friendly staff
  - Short-staffed
  - No succession planning
  - Competing priorities for the Harbor Director position
- Business and lease management
  - Need to modernize the financial management and auditing system
  - Business/lease management skillset required in the department (specifically to oversee the department)

In addition, TCFOE developed a list of challenges and opportunities for the Harbor Department based upon interviews and their analysis of operations.

The main challenges include:

1. Reduced workforce and potential inequitable pay for Harbor Department staff
2. Lack of focus on waterfront maintenance and insufficient funding available for capital improvement projects
3. Limited attention given to the Tideland Trust Leaseholders

TCFOE Assessment Recommendations

On the positive side, TCFOE did identify several opportunitieswhich form the basis for their recommendations. The TCFOE report included a table of recommendations, which is reflected below:

FOCUS AREAS	RECOMMENDATIONS
Facilities:	**A.** Establish a preventive maintenance schedule for the existing structures, piers, and docks. **B.** Collaborate with Community Development and Tideland Lease Owners to create new projects to enhance the economic development of the waterfront (Master Plan). **C.** Partner with Public Works Department to help oversee the Capital Improvement Projects needed on the waterfront. **D.** Renovate/upgrade the Harbor Department Building.
Organizational Structure/Staff:	**A.** Expand the organization structure to include a fully staffed department:

	a. Convert the Operations Supervisor position to a Manager position b. Create a new Harbor Patrol officer position c. Create a new Harbor Business Manager position i. See Appendix: Embarcadero Master Leaseholders, LLC Position Paper to oversee the current business coordinator and manage and negotiate leases **B.** Equitable Pay **C.** Succession Planning
Operations:	**A.** Increase collaboration across the City Departments. **B.** Improve finance management by working more directly with Administration Services Department Team. **C.** Upgrade and convert paper to digital files to increase operational effectiveness.
Business and Lease Management:	**A.** Create robust Tidelands Trust Leaseholders customer relationship management system. **B.** Explore revenue-generating resources to increase enterprise funds. **C.** Update the Harbor Department Website (Branding, Waterfront and Events Promotion, etc.).

City Staff Recommendations

Staff has moved forward on several of the recommendations, including Public Works and Administrative Services collaboration by seeking opportunities to better coordinate and execute capital and maintenance projects on the waterfront, and to streamline the interface between Harbor and Administrative Services Department with regard to leases and budgeting, while continuing to explore revenue generation ideas for future Council consideration (particularly to address larger capital projects' needs). Beyond those, there are some other more immediate recommendations that require the attention of the City Council.

There is a clear immediate need for an additional Harbor Patrol Officer. This is predicated upon several factors. The first being what was discussed above in terms of total harbor patrol staffing being reduced from 5 to 4 in previous years. The second factor is the City is in the process of recruiting a new Harbor Director with the current Director Eric Endersby announcing his retirement at the end of this year. Based upon the findings of this assessment and the previously stated desires of the City Council, the City Manager is placing an emphasis for the new Harbor Director to assume more of an administrative/business role compared to the current approach. Thirdly, from an operations standpoint, the Harbor Department heavily relied upon part-time reserve officers to fill shifts for vacation, sick and training coverage, and has observed a diminished pool of applicants for reserve officer positions. This has resulted in both an excessive amount of overtime for existing full-time staff and being understaffed in patrol which, of course, is a significant safety concern for staff and for the public. This reduction in available reserves appears to be part of the larger narrative in the SLO County region where it is harder to attract part-time labor given the increasing cost of living

here. In order to preserve safety of our water bearing community (visitors and community members alike), staff recommends moving forward with that added position now.

Financial Review of City Staff Recommendations

Revenues generated in the Tidelands Trust are legally obligated to be expended in the Trust for Trust purposes, and the fund designated for Harbor revenues and expenses is the Harbor Fund. Prior to the Great Recession of 2008, Harbor Fund revenues exceeded expenses by enough margin to support operations and management, as well as a modest capital program. During and after the recession, however, the revenue/expense curve began to flip, and combined with the cessation of the power plant outfall annual lease revenue ($275K) in 2014, the growing State PERS unfunded pension liabilities and greatly increasing operational costs due in large part to increased use of the waterfront, bay and beaches, the Harbor Fund has become challenged to meet its operating obligations and capital needs at a time when its infrastructure is showing its age.

Harbor Revenues

The ~$2.3M Harbor Fund generates the vast majority of its revenues (~78%) from the 35 lease sites and ~90 businesses among them, where the "master" lessee builds, owns, maintains and manages the improvements for the life of the lease on which to generate revenue and make a profit, and in return they pay the City (Harbor Fund) substantial rents in the form of a minimum rent and a percentage of the gross revenues generated on the site. While lease revenues have incrementally increased over the years, and in the COVID years we have seen record highs, without substantial new growth, the waterfront is largely at its carrying capacity in terms of revenue generation. The remainder of the Harbor Fund's fee revenues are derived from boating-related sources such as slip and mooring fees.

In addition, for the first time in Fiscal Year 2021/22, the City Council allocated significant revenues from non-Harbor funds (Measures E/Q) to the Harbor Fund to help the sustainability of the department and its services. Continued use of Measure E/Q funds for the Harbor Department occurred in FY 2022/23.

Harbor Expenses

On the expense side, like all City departments, the Harbor Department's greatest expense is personnel, representing over 55% of the budget in the current year. As noted above, the operations and administration of the Harbor Department are carried out with six full-time personnel, where prior to 2010 it was eight full-time positions.

Other expenses, however, are significant and growing as well, such as general facility upkeep to meet service demand, costs of utilities (trash, water, electricity) and maintenance and repair. And while the Harbor Fund in general is now operationally balanced, adding the capital need drives it into the negative as currently there is identified a ~$800K per year capital shortfall to keep up with the existing infrastructure.

Of course, the department's staffing needs must be balanced against the available resources at hand for the Harbor Fund. City staff recently reviewed the Harbor Department/Fund finances and forecasts and conservatively estimated that the Harbor Fund should have approximately $250,000 to $350,000 in revenues over expenses for the foreseeable future. This analysis includes the following assumptions:

- Conservative estimate of Harbor Fund revenues. The analysis looked back several years prior to COVID-19, and current year forecasts assumed some slowdown in the economy to land on a conservative estimate.
- Continued support of Harbor Fund from Measure E/Q. From Measure E/Q in FY 2022/23 the City is investing $238,000 in Harbor operations for reserve harbor patrol, lifeguard and disposal expenses, and $210,000 in one-time funding for capital needs assessment .
- Small, but consistent investment in Harbor capital needs. The revenues over expenses estimate above assumes continued average annual capital expenses from the Harbor Fund of $135,000-$140,000.
- Maintain Harbor Fund balance over 20 percent.
- Increases in PERS contributions from the Harbor Fund toward the City's unfunded liabilities

Staff feels confident that with this analysis, the request for an additional Harbor Patrol Officer position can be supported, while leaving open the financial capacity to address other needs in the Harbor Department outlined in the TCFOE recommendations.

Next Steps

For the remainder of the TCFOE recommendations, staff recommends waiting until a new Harbor Director is recruited and appointed and the classification and compensation study is completed, both of which are now underway (study estimated to be completed February 2023). Because we don't yet know who the new Harbor Director will be and what will be their strengths in terms of administrative versus operational, by waiting until they are appointed that new person will be part of the department staff gap analysis and new organizational chart development.

The City Manager will work with the new Harbor Director to review Harbor Department organizational structure, and evaluate staffing size on the administration side, as well as factor in findings from the classification and compensation study with regard to Harbor positions. Together, they will develop recommendations for City Council consideration on the number and assortment of positions on the administration side (particularly as it relates to lease management) and allocation of departmental responsibilities on the operations side. The TCFOE report will be an important resource in that review.

ATTACHMENTS

1. TCFOE Assessment Report for Morro Bay Harbor Department
2. Resolution No. 102-22

The City of Morro Bay – Harbor Department

Organizational Assessment Report – Fall 2022

Prepared by:

THE CENTRE FOR ORGANIZATION EFFECTIVENESS

Table of Contents

Introduction *3*

About Morro Bay and the Harbor Department *3*

Purpose of the Organizational Assessment *4*

Process Overview *4*

The Centre for Organizational Effectiveness Process *4*

Stakeholder Engagement *5*

Alignment with City Council Goals *6*

Recommendations *6*

Challenges and Opportunities *6*

Recommendations and Next Steps *7*

Attachments *8*

Introduction to Morro Bay

Nestled on the Central Coast of California, Morro Bay is a charming, tranquil community often called the "gateway to the north coast," being a prime hub city at the crossroads of the infamous Highway 1 and Highway 41. Just 12 miles north of San Luis Obispo, Morro Bay has a uniquely wild setting and sits along a natural estuary, making it a fantastic spot for animal enthusiasts, fishing, boating, and incredible surfing along Morro Rock, an extinct volcano jutting 500 feet above water-the iconic and defining landmark of the City.

City Growth

Morro Bay is experiencing significant growth in tourism and economic vitality. The waterfront will continue to be a draw for locals and visitors to enjoy the natural beauty around the bay. The waterfront has a nautical feel, combining a working waterfront for commercial and recreational purposes with tourist-serving retail, restaurants, and accommodation. The working waterfront and a working commercial fishing port are valuable and unique resources that are an essential part of the City and County's tourism industry.

About the Harbor Department

The Morro Bay Harbor Department is in the heart of the Morro Bay waterfront that has welcomed boaters, tourists, and locals with a friendly can-do attitude for over 60 years. The Harbor Department provides boater assistance, emergency response, code enforcement, environmental protection, and facilities maintenance for the waterfront and the waters of Morro Bay. They are the frontline for Morro Bay’s Waterfront primary economic drivers-tourism and commercial fishing and the first connection point between the harbor business district and lease/facility management, public safety on the water, and environmental protection and sustainability in the area.

The Harbor Department is structured as an Enterprise Fund and operates from revenues generated from the Tidelands properties they manage. Income received from tenant rents, boat fees, waterfront tideland leases, and other sources is put back into preventative maintenance, capital improvement, parking services, staffing, public safety, special events, and public education for the City of Morro Bay.

The Morro Bay offshore wind auction begins in December 2022. The project will uniquely position the Harbor Department as a maintenance provider if awarded. As part of the Green Energy initiative, the Harbor Department is involved in the review of the proposed battery storage system and facility, designed to help the Central Coast of California with renewable energy.

Purpose Of This Organizational Assessment

The City of Morro Bay requested The Centre for Organization Effectiveness (TCFOE) to provide consulting support in the form of an organizational assessment of the Tideland Trust Lease Management. After the initial review, the scope broadened to include an organizational evaluation of the Harbor Department. The focus of this work was to assess the workload demands placed on the department and the structure of critical internal positions to determine opportunities for operational efficiencies moving forward. The consulting support also focused on an appropriate staffing model for the next five years to support the department in effectively meeting workload demands and serving the community.

Process Overview

The TCFOE consulting work comprised two phases: 1) organizational assessment and 2) consulting and change management.

Phase 1 - The organization assessment consisted of the following key elements:

- In-depth review of the relevant organization and department documentation and background information (e.g., org chart, job descriptions, budgets, work plans, etc.)
- Individual interviews with the Harbor Director, City Manager, and key stakeholders (*All Harbor Department full-time personnel, Fire Marshall, Police Commander, Morro Bay Citizens, CEO of Chamber of Commerce, Commercial Fishing, Lease Owners, Former Santa Barbara Harbor Operations Director, Harbor Advisor Board Members*) to gain insight on the functionality of the department and potential structural challenges
- In-person shadowing of the internal staff to collect data and gain insight on job roles/responsibilities, workload demands, pain points, opportunities, vision for the future of the dept, etcetera
- In-person meeting with all City Department Heads to discuss the interconnectivity of the Harbor Department with other City departments to increase opportunities for operational efficiencies and support
- Completed an internal Department Analysis - Operational efficiencies, department structure, and staffing model for the future
- Development of a preliminary Harbor Department Organization Assessment Report with summary findings and possible next steps

Phase 2 - Consulting and Change Management consisted of the following key elements:

- Ongoing consulting and thought partnership to support the Harbor Director and staff in implementing operational adjustments
- Outlining strategies to fund future services/staffing model

Stakeholder Engagement

A vital part of this process was partnering with key stakeholders in the community as well as job shadowing Harbor Department employees to identify opportunities for efficiency and prioritize current and future opportunities for the Morro Bay Harbor Department to support the City's growing and changing needs. The data was collected and analyzed in April and May of 2022, and key themes emerged to inform the strategies and recommendations outlined in this report. The following themes emerged in 4 core areas: facilities; operations; organizational structure and staffing; and business and lease management.

Facilities:

- Deferred maintenance
    - Antiquated buildings, public and privately owned, on the waterfront
    - Too few staff and staff to be able to dedicate themselves to water-specific maintenance and oversite
- Insufficient funding to address the backlog of capital improvement projects
- Insufficient maintenance log to ensure maintenance activities performed
- Outdated Harbor office equipment and inadequate office space

Operations:

- Lack of knowledge and resource sharing across City departments
- A need to brand what the Harbor is and isn't responsible for (both internally and externally)
- Limited staff
    - Down one Harbor Patrol Officer position since 2010
    - The administration role was reduced to a part-time position since 2019
- Training /Certifications - limited time, resources, and funding to enhance skills and stay current with training (public safety, CA boating laws, environmental protection regulations, etc.)

Organizational Structure and Staffing:

- Friendly, dedicated, and accommodating staff
    - The Harbor Department maintains a hometown feel, is willing to jump in and help with anything, has a can-do attitude, and excellent customer service known by boaters up and down the coast (do not want to lose this positive attribute)
    - While the staff is often overaccommodating, it often leads to a willingness to say "yes" to everyone at the expense of existing work plans
- Short-staffed and current staff stretched thin
- Succession planning
    - In need of a Harbor Director successor with an understanding of harbor operations and a skillset in business/lease negotiation and visioning
- The Harbor Director's current job functions have many competing priorities, which require tradeoffs and compromise

Business and Lease Management:

- Modernize the financial management and auditing system
- The tension between lease management and code enforcement
- Business/lease management skillset required in the department
    - Need an individual with a business mindset to be overseeing the department and manage leases
- Insufficient reserve funds for capital projects
- The division between Tideland Trust Lease owners and City
- Digitize the Tideland Trust Lease Agreements
- Prepare for the sustained increase in tourism
    - Increase in foot traffic to the waterfront, public and private buildings are in dire need of capital improvements

Alignment With Morro Bay City Council Goals

In November 2021, the City of Morro Bay (in partnership with residents) conducted a series of visioning and goal-setting efforts to identify strategic priorities for the City. Through this process, five strategic priorities were identified:

1. **Public Infrastructure** - (1) Cleanliness and safety issues in heavy tourism areas, (2) capital needs.
2. **Fiscal Sustainability & Economic Vitality** - (1) Address the City's unfunded liabilities, (2) determine potential paths to secure funding for capital needs, and (3) support expedient catalyst site development.
3. **Housing** - (1) Identify the opportunities for additional housing options and explore partnerships to support these efforts.
4. **Climate Action** - (1) Consider opportunities to reduce reliance on carbon-producing energy sources.
5. **Community Health** - (1) Educate Council and staff about Diversity, Equity, and Inclusion (DEI) and engage in a community conversation.

As part of the organizational assessment, the TCFOE and Harbor Department continued to align the recommendations and next steps to the City's strategic priorities.

Challenges and Opportunities

The challenges the Harbor Department has faced over the last decade include too few resources while taking on the additional scope of work. As a result, there were three specific unintended consequences:

1. Reduced workforce and potential inequitable pay.
2. Lack of focus on waterfront maintenance and insufficient funding available for capital improvement projects.

3. Limited attention was given to the Tideland Trust Leaseholders.

Due to this, a few short- and long-term opportunities were identified.

Short-Term Opportunities:

1. Create a complete inventory of the Tideland Trust Agreements.
2. Microfiche all documents for easy accessibility of record keeping and auditing.
3. Hire a new Harbor Director and Harbor Business Manager with solid business acumen to manage the relationships with Tideland Trust leaseholders.
4. Convert the Operations Supervisor position to a Manager position to create efficiencies.
5. Enhance the collaboration with Public Works/Community Development to create a substantial maintenance log and Capital Improvements log.
6. Conduct monthly reviews with finance to track revenue and expenses.
7. Create a new Harbor Patrol officer position.

Long-Term Opportunities:

1. Identify opportunities to enhance existing and create new revenue-generating resources.
2. Increase collaboration between the City Manager and the new Harbor Director to ascertain optimal department structure and staffing.
3. Identify the purpose and function of the Harbor Advisory Board (HAB). The new director to collaborate with the HAB to focus on critical priorities.

NEXT STEPS AND RECOMMENDATIONS

The following focus areas and recommendations are opportunities for operational efficiencies moving forward through the organizational assessment process.

FOCUS AREAS	RECOMMENDATIONS
Facilities:	**A.** Establish a preventive maintenance schedule for the existing structures, piers, and docks. **B.** Collaborate with Community Development and Tideland Lease Owners to create new projects to enhance the economic development of the waterfront (Master Plan). **C.** Partner with Public Works Department to help oversee the Capital Improvement Projects needed on the waterfront. **D.** Renovate/upgrade the Harbor Department Building.
Organizational Structure/Staff:	**A.** Expand the organization structure to include a fully staffed department:

	a. Convert the Operations Supervisor position to a Manager position b. Create a new Harbor Patrol officer position c. Create a new Harbor Business Manager position i. See Appendix: Embarcadero Master Leaseholders, LLC Position Paper to oversee the current business coordinator and manage and negotiate leases **B.** Equitable Pay **C.** Succession Planning
Operations:	**A.** Increase collaboration across the City Departments. **B.** Improve finance management by working more directly with Administration Services Department Team. **C.** Upgrade and convert paper to digital files to increase operational effectiveness.
Business and Lease Management:	**A.** Create robust Tidelands Trust Leaseholders customer relationship management system. **B.** Explore revenue-generating resources to increase enterprise funds. **C.** Update the Harbor Department Website (Branding, Waterfront and Events Promotion, etc.).

ATTACHMENTS

Chamber of Commerce (April 2022)

Embarcadero Master Leaseholders, LLC Position Paper (September 2022)

Morro Bay Chamber of Commerce
Harbor Department/Waterfront Sustainability Recommendations
April 2022

The Chamber has weighed in on a number of occasions about the fiscal sustainability of the Harbor Department and needed improvements to the Waterfront. The Chamber reconsidered its existing positions related to the Waterfront in February of 2022 as part of our update to the organization's Legislative Platform. The Governmental Affairs Committee (GAC) welcomed City Manager Scott Collins and Harbor Director Eric Endersby to its February meeting to assist in this move-forward evaluation. The Board then reviewed recommendations made by GAC and approved the following narrative and recommendations.

Why We Care
An essential question for every Board policy position is why the Chamber should care. Preserving the Waterfront as a functioning economic unit depends on efficient and competent management and support services. The Harbor Department currently administers the Tidelands leases (and maintains leased facilities) and is therefore the "landlord" for many of our members. Having an adequately staffed and adequately capitalized landlord is important to make sure that these services are provided. The Harbor Department is also the leasing and maintenance entity for facilities that support the commercial fishing industry.

Recommendations

1. Implement paid parking.
2. Charge fair market rents and at least full cost recovery.
3. Implement and enforce Tidelands properties lease terms.
4. Explore professional property management for Tidelands leases.
5. Expedite development of the City Market Plaza property.
6. Create a sub-fund for the Measure D area to track revenues and expenses.
7. Actively manage Tidelands lease site renewal for consolidation.
8. Adjust operating costs to create adequate infrastructure reserves.
9. Establish an Enhanced Infrastructure Financing District (EIFD) on major development properties.
10. Develop a comprehensive infrastructure needs and financing plan
11. Master plan the power plant and treatment plant sites (and adjoining sites), including a connection from Atascadero Road to the Embarcadero.
12. Explore the establishment of a Business Improvement District for Waterfront promotions and improvements.

13. Explore the establishment of a special assessment for non-Tidelands lease Waterfront properties to fund their "share" of harbor operations costs and needed infrastructure.

Background

Over the past three years, the Morro Bay Chamber of Commerce has undertaken an evaluation of the various issues associated with the successful operation and improvement of the Waterfront and Embarcadero areas. In some respects, this area is the life blood of the community because it hosts and supports the commercial fishing industry and is the primary tourist destination for the community's visitors. According to the 2017 Economic Development Roadmap, 26% percent of the City's sales taxes come from the 90 businesses operating in the Embarcadero economic center. Of Morro Bay's 38 hotels, 26% are located on or below the bluff of Embarcadero. Virtually all of the 7.5 million tons and nearly $15 million of Morro Bay commercial fishing earnings in 2016 and 2017 occurred at the docks on the Waterfront. Preservation of this area as an economic asset for the community is important in both the short and long term.

Over the last 10 years the City and Chamber have participated in a number of efforts to ensure a successful future for the Waterfront, including the Waterfront Master Plan, LEAP, the Economic Development Strategic Plan, the Downtown Waterfront Strategic Plan and various other special planning efforts. However, the success of the Waterfront area is both benefitted and hampered by an amalgam of regulations, operating policies, public improvement and operational financing structures. These include the funding for the Harbor Department itself, the impact of Measure D, and the Tidelands lease regulations and policies. During each of these strategic planning efforts there has been an acknowledgement that there is a "structural" deficiency in the way the Waterfront is operated, maintained, financed and managed. As early as 2008, Management Partners, a management consulting firm for the public sector, noted that "revenues [from the fishing industry] are expected to decline over the coming years while Harbor Department expenditures will rise with inflation. Commercial fishing activity will continue to decline as the focus changes from near-shore fisheries to mid-ocean fisheries, or boats relocate to other areas or are retired." The report noted that the economics of the Harbor Department were not sustainable, commenting that "although operation of the harbor in Morro Bay provides the City with $294,000 in revenue in FY 2009…it does not have the funding in place to address the immediate maintenance needs….". The report recommended that the City consider alternatives to address the issues.

In 2019, the Chamber's GAC did its first "deep dive" into several salient issues related to the Waterfront, and the Chamber Board adopted policies and recommendations that that it believed would remedy current short comings and maximize success in that area. Those recommendations included modifications to Measure D restrictions and modifications to the Tidelands lease policies and their administration. The 2019 Chamber recommendations stated that:

1. The City should evaluate the appropriate uses and sources for Tidelands lease revenues and determine which portion of the revenues should be reserved to maintain and improve the asset being leased, which portion is for "common area maintenance" such as Harbor operations and maintenance, and which portion is for base rent of the asset. The City should also establish a financing mechanism so that non-Tidelands lease properties pay an equitable share of the Waterfront area's maintenance and operations through a Business Improvement District, Parcel Tax or other mechanism so that all properties contribute to such funding.

2. The City should consider whether or not it makes sense to create sub-funds for the lease facilities in the Measure D/CF zone district, and the remainder of the Waterfront. Sub-funds would eliminate commingling reserve funds and treatment of each of these sub-areas as their own internal funds. Each geographic area is functionally and economically different, and has different capital replacement needs.

3. The City should consider, after significant outreach to affected business, the establishment of a paid parking program in and adjacent to the Waterfront on all City parking lots and on-street parking. These revenues should be used to pay for maintenance of the parking lots (currently paid for out of the Harbor Department or the Public Works budgets), street maintenance, sanitation, transit/trolley subsidy, and funding of capital improvements and improvement of coastal access.

4. City should evaluate the cost allocation and fair market rents for the Tidelands lease sites and ensure that, over time, they are comparable and do not exceed market rates. Part of this effort is already underway with the Cost Allocation Study.

In 2020 the Chamber revisited this issue, this time in the context of the fiscal and economic challenges presented by the COVID-19 Pandemic and made recommendations for the Harbor and Waterfront as part of its Morro Bay COVID-19 Pandemic Recovery Plan. The Chamber's recommendations included a number of Citywide and Harbor revenue enhancements including the approval of Measure E, a revision to TOT and TBID funding allocations, surplus property sales, paid parking, Waterfront RV Parking, and savings from operational modifications. These measures were intended to provide the Harbor Department with additional funding to cover their current operating deficit ($130,000 per year), fund reserves for capital replacement and existing infrastructure needs ($40,000 per year), provide funding for unfunded deferred asset improvements ($82,500 per year), and provide $150,000 per year in funding for access improvements (bikeways, sidewalks, streets, parking, and improved water access) on the Waterfront.

In 2021, the Chamber again addressed this issue in its comments on the General Plan. In particular, it recommended that the City implement an Enhanced Infrastructure Financing District (EIFD) in conjunction with the Vistra project and other major improvements in the community. An EIFD is a tax increment financing mechanism where new property tax dollars from new development are earmarked for infrastructure improvements in the community as identified on a capital improvements plan. Such a financing mechanism could generate $750,000 to $900,000 per year if only 10% of the new property taxes from a handful of key properties (including the Vistra site, current vacant properties on the Embarcadero and, perhaps, Morro Elementary) were allocated from the City and County. The revenues would be produced from a re-allocation of the 1% property tax rate and no new taxes would be created, so no general or special election would be needed. The Chamber has recommended this financing instrument in its comments on the General Plan update, and as part of its "Infrastructure: It's Time to Get Serious About the Future" theme in its recommendations on City goals and policies.

Moving Forward

Several of the Chamber's recommendations above have been implemented, or are in the process of being implemented. Paid Parking is moving to a pilot stage, and (new) Measure E money has been used as a funding source for some Harbor/Waterfront items. There is still intense interest in solving the long-standing problems, and progress has been made in several areas. Much work needs to be done. The

Harbor Department's revenue growth over the last 17 years has been a nominal 20% increase ($350,000, and 1.1% per year), while costs have increased 65 percent. Using a CPI Calculator for comparison, in current dollars, the Harbor Department now collects $815,000 less than it did in 2004/2005. Some of this decline has been from the elimination of PGE revenue (which was $250,000 in 2008). Total lease revenues have been flat since 2010/2011.

Actual expenditures have remained relatively static over time (averaging $2.1 million per year). Over that time the Harbor Department has accumulated a negative $1,675,000 fund balance which primarily represents unfunded depreciation. Net cash from operations and available to fund capital or place in reserves is expected to be less than $100,000 in 2021/2022. City staff estimates that there is a need for over $800,000 per year for capital over the next 10 years, although this number needs to be confirmed. It is important to note that the Harbor Fund is an enterprise "business fund". That means its revenues are derived from its normal operations (like the sewer and water fund), and that there is little or no commingling of other City "Trust" or "Governmental" funds. This means that the Harbor Department is expected to pay its own way; to the extent that it collects more than it spends on operations, it will have money for new investments and to replace aged infrastructure. If there is no "profit" or net cash flow in the enterprise, improvements cannot be made.

The Harbor Department's current Capital Improvement Plan identifies a need for $4.9 million in improvements, including repair and rehabilitation of five (5) Beach Street Commercial Fishing Slips ($662,004), South T Pier Renovations ($55,000), replacement of the Harbor Patrol Boat ($315,000), North T Pier Renovations ($3,810,000), maintenance of the Harbor Ice Machine ($10,000) and rehabilitation of the Boat Launch Facility ($60,000). Funding for these improvements appears to be sourced from a Cable Committee Grant ($100,000), Harbor Accumulation Fund (Reserves) ($567,000), Castle Wind Community Benefits Agreement ($130,000), Friends of the Harbor Department ($100,000), a State Grant ($85,000), Equipment Replacement Fund ($50,000), Measure Q/E ($50,000), Harbor Operating Fund ($50,000), and a Federal Grant ($3,800,000).

These improvements, however, do not include important investments in the Waterfront, including road maintenance, parking lot maintenance, improvements to Coleman Park, maintenance and improvements of City-owned improvements on the Tidelands lease properties, improvements and maintenance of the Harborwalk, completion of the Harborwalk on City property, beach/waterfront access improvements, sidewalk repairs and other related improvements.

It is the Chamber's position that urgent action is needed to sort out operating and capital needs from a holistic perspective. How much should Tidelands Lease revenues be committed to various kinds of capital investments, including maintenance of the asset that is actually generating the revenue, and funding sources? Options could include, however unpopular, drastically scaling back Harbor operational staff and costs, letting assets fully depreciate and commit to not replacing them, creating adequate net revenues after operations to fund infrastructure, full, market rate rents and full cost recovery for leased assets, and diligent implementation of Tidelands lease terms.

Embarcadero Master Leaseholders, LLC

Position Paper

The Embarcadero Master Leaseholders, LLC would like to offer this position paper to the City Council, the Harbor Advisory Board and all the other organizations that are concerned with the future viability of the City of Morro Bay's waterfront enterprise and its very important contribution to the economic well being of the City. This association of entrepreneurs and business owners have invested their dollars and their energies into what they all agree is an enterprise for the betterment of the City and one which can be utilized to fund needed harbor related infrastructure, the local fishing industry, the visitor serving industry, and as a basis to undergird the finances of the City of Morro Bay as a whole to the benefit the local citizens and the regional community. The master leaseholders and other business owners on the waterfront have given their investment of money, time and energy in the waterfront, are the most ardent and committed advocates for the success of the City's efforts to maximize the revenues to the Harbor Enterprise fund and are committed as no one else to its goals.

In recent years the Tidelands Trust properties have suffered from a failure to be recognized as the beneficial and exciting asset that they are to the City of Morro Bay. The City has failed to operate the enterprise as the profit-making asset that it has the potential to become. We have fallen behind other such Tideland Trust enterprises in the State of California by not utilizing modern management principals and policies and it is becoming manifest in declining revenues to the Harbor Enterprise Fund.

The EML wants to emphasize the importance of the City's and therefore the City Council's recognition of the Tidelands Trust properties as **assets** belonging to the City that are the significant driver of not just the revenues to the Harbor Enterprise Fund, but also the most significant resource driving the economy of Morro Bay. We'd like to see the governance of the City adopt the attitude of a **property owner** of the Tidelands Trust properties that has entered into a business relationship with the Master Leaseholders and their subtenants, with all of the players working to maximize the economic potential of the Embarcadero and the unique ambiance and attractiveness of Morro Bay.

To that end we offer the following suggestions, opinions and criticisms:

Executive Summary

1. The Embarcadero Master Leaseholder's, LLC views their relationship with the City as a landlord/tenant enterprise that is a special public/private partnership intended to provide the City with a revenue stream designed to fund special public services uniquely available here in Morro Bay. A working waterfront, a harbor with support services for the commercial fleet, a coast guard base serving the larger needs of ocean enterprises, and

in the future the landing and support services for the offshore energy industry slated for development off of our shores, not to mention the ocean access for public recreation, public fishing access and all of the other experiences available here in Morro Bay are some of what this public/private enterprise provides.

2. While this public/private partnership has been ongoing for many years, its become apparent that we, as a City and we, as the private side, need to modernize our approach to the management of this enterprise and that innovative, vigorous and attendant professional management is needed so as to not fall further behind in maintaining a dynamic business climate on the waterfront and maximizing the revenue available to provide the services to the public and the other users of the waterfront. The EML recommends that the City establish a new position within the Harbor Department for a business manager whose role is to market and manage the master leaseholds' redevelopment and the renegotiation of expiring and expired leases and to act as an ombudsman for the development of the leaseholds and other projects affecting the viability of the Tidelands Trust properties and businesses.
3. The Embarcadero Master Leaseholder's, LLC is supportive of the proposed paid parking program provided that the City secure the input of the stakeholders affected by the implementation of the program. In addition to visitor parking, provisions need to be made for other users such as fishermen, live aboards, the hotel businesses and employees who have special needs for parking.
4. The EML would also support an allocation of the Measure E sales tax revenues and the TOT revenues into the Harbor Enterprise Fund.
5. The EML would like to have the City Council prioritize traffic circulation issues on the waterfront. Immediately they should consider relieving congestion on the north end by opening the bridge across Morro Creek to the Embarcadero/Hwy 41. Future development on the waterfront or on the Atascadero Road connection to North Embarcadero should trigger traffic studies of other alternatives to alleviate traffic congestion.
6. The EML further believes that it is time to provide additional parking in the triangle parking lot.

Finally, the EML would encourage the City Council to view the Tidelands Trust properties as special and important **city assets**, to be used by the City to generate the revenues needed to fund vital harbor infrastructure and services. To that end we would urge the City Council to encourage private capital investment and private sector financing by discouraging outside agencies and the city's staff from imposing additional, often unnecessary, regulatory burdens that tend to create impediments to attracting the private capital and private sector financing so necessary to the development and redevelopment of this vital resource for the City of Morro Bay.

Please refer to the following sections for further explanation and background supporting the Embarcadero Master Leaseholders LLC position on the above summarized suggestions.

Professional Management of Leases and Redevelopment Strategy

Much discussion has been had recently at Chamber meetings, City Council, Planning Commission and Harbor Advisory Board about the long term financial prospects for the Harbor Enterprise Fund. Looking at the attached harbor Operating Summary of Revenues and Expenditures it has been noted that the Total Revenues have remained essentially flat for the past four years and projected through next year. Inasmuch as roughly 90% of the Total Revenues are derived from the Tidelands Trust revenues and those revenues have declined faster than the Total Revenues, it must be asked just why we have seen the Tideland Trust revenues decline and what can be done to remedy that decline.

Master leases for the Tidelands Trust properties have been standardized over the last ten years to a format that provides annual cost of living increases to base rents and an adjustment to base rent every five years to bring the base rent to 8% of the appraised value of the underlying land and water area or to 75% of the average of the total base rent plus percentage rents paid over the preceding five years. Those provisions provide for the revenue from the leases to keep up with inflation and the value of the appreciation of the value of the property. It should be noted here that the history of the last four years still shows a decline despite the application of the ratchet clauses.

The lease format of the state of the art Tidelands Trust leases are a base rent versus percentage rent structure wherein the master lessee is to pay either the base rent or a percentage of the revenue derived from sales from the premises, whichever is greater. This is an economic model that was pioneered by the advent of the enclosed shopping mall back in the 1960's. Essentially the idea was that both the tenant and the owner of the shopping center benefitted from the advanced management practices of the major mall shopping venue. By creating and maintaining the ambiance of the premises and maintaining the occupancy of the mall with dynamic cutting edge and complimentary retailers, the sales volume of the individual retailers would be maximized and would justify paying additional rent as a percentage of sales over what would customarily be the rent in a less dynamic venue. That additional rent was an incentive to the mall owner to manage the mall and tenancies to accomplish the enhanced ambiance and dynamism of modern retail trends and to keep the mall as fully occupied as possible.

Applying those principles to the management of the Tidelands Trust leaseholds, it is in the City's best interest to manage their 'mall' so as to maximize the sales of the existing tenants and to repopulate the 'mall' when vacancies occur with new, modern, retailers and new master leaseholders and to redevelop tired and obsolete buildings with up to date and state of the art buildings that serve to increase revenues and benefit the existing and continuing tenants so as to increase and maximize their sales and revenues.

Under the above described lease format, lease revenues are ratcheted upward to keep pace with inflation and the appraised value of the land. Beyond that there are only two other opportunities to enhance lease revenues to the City:

1. Increase sales and thereby increase percentage rent revenue to the City. Proper and professional marketing to increase the amount of tourism is the obvious route to accomplish this. Less obvious is the timely and diligent efforts to attract new and dynamic retailers and other compatible users to the 'mall'. These kinds of users change through time and the manager and master lessors must be vigilant to spot trends and take advantage of new kinds of users compatible with the existing retailers. Twenty years ago there were no paddle board sales and rentals, wine tasting rooms, e-line surf boards, and any number of new modern uses. There will continue to be new trends and fads in retailing and restaurants that we need to attract and bring into our market. Those new uses keep the interest and dynamism of the 'mall' up and tourism interesting.
2. Redevelopment. The redevelopment of the property should, by the nature of redevelopment, provide increased base rents with new and innovative businesses. But, it is vital that when master leases approach expiration and the building(s) have reached their life expectancy, that the management strive to seek new and innovative developments to replace the old and tired structures and businesses. The City's policy on expiring leases provides that the existing master lessee be allowed to propose a new development or a new lease to replace the expiring lease provided that the proposal is made and agreed to by the City and master lessee before the end of the fifth year prior to the expiration of the then term of the master lease. If the negotiations with the existing master leaseholder are not completed by that time, the City must be compelled to issue an RFP and seek other competitive proposals. Five years, given the complex development approval process in these waterfront areas is probably the minimum time required to complete the entitlement process so that construction or redevelopment can proceed with the least delay to the commencement of the City's income stream from base and percentage rents.

Interim and short term leases with subtenants may appear to allow continuity of a business or the reservation of a lease site for a desirable user, such as was done for the Aquarium, and may be a desirable motivation, but have instead have led to un-redeveloped sites and underutilized City assets. Now, in the case of the Aquarium, it will be at least another ten years before that site can be redeveloped to its full potential. In the meantime, just the rent from what is essentially a single sub tenant will be realized by the City. Probably no more than half of the potential income from that site will be realized for the duration of the current lease. And the benefit to the entire Embarcadero of a new state of the art building along with the amenities it would have provided, such as the connection to the lateral access complex, is lost for at least that ten years.

The EML acknowledges and appreciates the efforts made by City and Harbor Department staff in the management of the waterfront leaseholds, but we also recognize there are certain skills and experience required to properly manage the long-term prospects for marketing and promotion of the waterfront area and especially in the marketing, negotiation and development processing

of long term master leases that require and include the redevelopment of the aging structures that exist there today.

Most other Tidelands Trust jurisdictions in California have a business manager or director on staff whose responsibility it is to manage the leases with a particular focus on redevelopment of expiring leases and maximization of sales through marketing and promotional strategies to increase and maximize traffic and sales on the leaseholds. While the Harbor Department staff do a very good job at their vital responsibilities including their very important and essential public safety duties and at the day to day management of lease collections, lease notices, sublease approvals and all the other administrative details associated with the Harbor Enterprise Fund, they are overburdened with all those other obligations and the long term renegotiation of expiring master leases and marketing for RFP's on leases reaching that 5 year deadline have been neglected.

What is needed and what the EML recommends is for the City to establish a new position within the Harbor Department for a business manager whose responsibilities include what we have described above and, in addition, should specifically be detailed to be an 'ombudsman' within the City hierarchy for the redevelopment of the leaseholds and other redevelopment projects such as the Market Place and other developments that directly affect or are linked to the success of the Embarcadero. They should attend all Community Development and Planning Commission meetings on such projects to act as an ambassador on behalf of the applicant to assure expedited processing and to serve to assure understanding of the process between the City departments and the applicants.

Recently the County of Ventura went through the process of replacing their waterfront business manager because of the retirement of his predecessor. They utilized the services of W. Brown Creative Partners, a headhunting firm, to find four qualified individuals with interest in the position. A committee of leaseholders in Channels Islands Harbor interviewed and vetted the applicants and then made their recommendation(s) to the County. The position with salary and benefits has a cost to the County of $200,000 to $225,000 annually. We would expect the similar position in Morro Bay would cost more in the realm of $190,000 to $210,000 which would be at least partially offset by the reduction in the CAP reimbursement to the City from the Harbor Enterprise Fund. But the benefits of a full-time business manager focused on enhancing the revenue from our waterfront would outweigh that net cost by a factor of two or three over the next ten years. Failure to find a way to keep up with expiring leases and expedite redevelopment will result in continuing decline in Tidelands Trust revenues.

Harbor Enterprise Fund; Alternative Funding Sources

There is no doubt that the traditional funding sources for the Harbor Enterprise Fund are falling short of needs. The loss of $250,000 per year from the power plant outfall lease has had a decided

negative impact on the Harbor Enterprise Fund's budget. Infrastructure maintenance and replacement has fallen way behind and there is little prospect of catching up without some drastic changes. Failure to replace aging and failing infrastructure will only result continuously degrading facilities and a downward spiral in revenues. The Harbor Advisory Board and the City Council have looked for alternative sources of revenue as follows:

Paid Parking (Embarcadero): The EML supports the implementation of a paid parking program as described in the Walker Consultants study, beginning with a pilot program as described in their study except that additional input from the local merchants needs to be considered regarding the exact location of the pilot program. We believe that it is imperative that the implementation be supervised and conducted with the input of a committee that includes affected business stakeholders. Critical issues such as employee parking, live aboard parking, and early morning and long term fisherman parking are issues that require an intimate knowledge of the needs of the users of the Embarcadero and the waterfront. Those stakeholders need to be included in the decision making and the EML should be a significant participant.

Boat Storage on the Triangle Lot: The Harbor Department has established dry boat storage on the triangle parking lot. It is said to be temporary with the goal of opening the parking lot to additional public parking for the Embarcadero businesses. With the increased traffic in recent years parking is becoming a significant issue. Conflicts with parking between businesses such as the restaurants and the sportfishing enterprises have come up and will continue to increase as their businesses build. It is time to make the improvements to the triangle lot and diffuse those conflicts by providing longer term parking away from the restaurants and other businesses for fishermen and other longer term users.

While the foregoing are a potential sources for additional revenue to the Harbor Enterprise Fund, they are really stop gap measures that won't generate the kinds of funds necessary to rebuild the aging infrastructure and provide the kinds of ongoing revenue to cure the long terms ills of the fund.

With the demise of the revenue from the power plant and its impact on revenues the EML believes it is time to rethink the relationship between the sources of revenue coming into the city's coffers and their allocation vis a vis the Harbor Enterprise Fund. For instance, is it still appropriate to charge the Harbor Enterprise fund $235,558 (this fiscal year's allocation for CAP)? Or has the allocation percentage changed since it was last evaluated? In the event that that a Business Manager is hired, the cost of that position should reduce the CAP and offset the cost back to the Harbor Enterprise Fund.

A compelling argument could and should be made with regard to the revenues that the City enjoys from the recent passage of Measure E of increased sales taxes. It has been shown that about 20% of the City's sales tax revenues are generated from sales on the Embarcadero and another substantial amount is generated by the tourists attracted to Morro Bay by the existence of the waterfront and its amenities are spent in the other areas of the City. There should be some

formula established to allocate a fair share of those sales tax revenues to the Harbor Enterprise Fund for the increased costs that the Fund has to cover because of the increased demands put on it by the impacts of the increased tourism to the fund's resources. A big part of the argument for the passage of the Measure was to fund police, fire and other vital human safety needs and the wording of the ballot initiative included the following language: "keeping beaches, public areas safe/clean…". The Harbor Department and the Harbor Patrol provide a substantial part of those needs, much of it needed by and provided to our local citizens, and yet it receives none of that funding, relying solely on the current sources of income from the Harbor Enterprise Fund. That needs to be addressed.

The Transient Occupancy Tax is another source of income that is highly dependent upon the attraction provided by the Embarcadero and Tidelands Trust tourism draw. Yet none of that revenue is used to offset the costs to the Harbor Enterprise Fund from those demands on their services. The EML believes that at least the portion of the TOT generated from the Tidelands Trust and the Embarcadero hotel and motel rooms should be allocated to the Harbor Enterprise Fund to offset those direct costs.

Access and traffic circulation

Gradually over the past decade and especially in the past two years during peak season and during peak hours, traffic in the Embarcadero area has become increasingly congested. It has become dangerously congested during peak hours between Beach Street and the Rock parking lot. Often on the weekend it might take as long as an hour to drive from the Rock to Beach Street. Not only is this kind of congestion dangerous in the event of an emergency at the Rock but it is also a discouragement for visitors wishing to enjoy our lovely area. The EML observes that there are some reasonable and easy short term solutions to this problem and there are also long term solutions that should be considered and included as a part of the General Plan or other development plans for the area. Opening the pedestrian bridge over Morro Creek in times of congestion as an alternative exit way could be a short term emergency solution. But it is not enough for the long term.

EML recommends that the City consider opening that bridge to two way traffic on a permanent basis as well as requiring a circulation study as a part of the redevelopment of the power plant or the old WRF. Consideration should be given to permanent access to Embarcadero through the power plant property by connecting Quintana to Embarcadero. Those changes would provide the needed relief from congestion, especially over the long term.

Also needed is additional parking on the Embarcadero. Many have championed a parking structure and perhaps that's a possibility for the future and perhaps the revenue or a part of the revenue derived from the paid parking plan can be set aside for its future construction. In the meantime the 'triangle parking lot' was acquired with the intention of creating additional parking

for the Embarcadero. It has since been repurposed (temporarily, supposedly) for boat storage and permanently for the expansion of the Maritime Museum. The EML supports the Maritime Museum as an important part of Morro Bay's cultural heritage and a significant attraction for visitors to Morro Bay. The future expansion of the Museum in accordance with the plan recently approved by the City Council would be an important and welcome addition. However, the Maritime Museum also needs the additional parking that could be provided on the parcel. While the boat storage has become a source of revenue for the Harbor Enterprise Fund (although just how much is not easily discernable from the Summary of Revenues and Expenditures) the property's use for the additional parking, particularly if the paid parking program is extended to there as well, would be more valuable with the potential paid parking revenue as well as its role in providing additional revenue through the businesses by the addition of parking serving those businesses. As a part of the development of the parking lot on the triangle parcel a new driveway at its northern most end is needed to enhance circulation and spread traffic movements out along Embarcadero. That driveway cut would also serve as additional pedestrian access from the lot to the businesses along the waterfront.

City Policies regarding financing of Leaseholds and General Plan and Local Coastal Plan requirements

The Tidelands Trust properties are **assets** that belong to the City of Morro Bay. The management of those properties is entrusted by the State Lands Commission to the City Council of the City of Morro Bay and the revenues derived from them is used to fund the Harbor Department and to maintain and develop the public facilities on the Tidelands Trust property. Currently the revenues from the Tidelands Trust properties amount to almost $2,000,000 per year, a very significant part of the City's budget and, if managed properly, would contribute much more. These properties also serve to drive the most significant part of the City's economy, namely visitor serving services and tourism. Those, in turn, produce sales taxes and Transient Occupancy Taxes (TOT) from the revenue from the city's hotel, motel and short term rental properties. It's appropriate here to point out for the local citizenry that a disproportionate amount of such sales taxes, TOT revenues and the income from the Tidelands Trust leaseholds serve to fund their local government and services. Without those revenues the City of Morro Bay would be hard pressed to remain a viable entity. The tourism and visitor serving industry is vital to the economic interests of the city.

The EML, while late to the process, played a role in the recent General Plan and Local Coastal Plan process and continues to be active in the Zoning Ordinance update currently under way. In that process we were many times frustrated by the city staff's failure to defend what are the city's assets from the whims of the Coastal Commission in burdening the Tidelands Properties to a degree exceeding other similar privately owned properties within the city. The effect was to

essentially devalue the cities' own assets because of those additional burdens, to the city's detriment.

In order to develop or redevelop these properties the city needs to attract private equity and private sector financing. Both of those sources of funding and financing are equally likely to find properties in the private sector that do not have the restrictions and additional and time-consuming development processing requirements that these properties are burdened with that will still provide the investor with comparable returns. So as **'property owners'**, it is incumbent on the City Council to do all that they reasonably can to make these properties as competitive as possible to attract that private equity and private sector financing required to develop and redevelop these properties to their highest and best uses and therefore to their highest income producing potential. Especially in light of the tendency of public agencies' not to appreciate the real uses of these properties to generate income to the City.

Recent examples of the public agencies' over burdensome exactions include:

1. The State Land Commission's discouragement of a policy to allow refinancing of the leasehold interest when the proceeds are not being used to improve the leasehold asset. No such restriction exists when the investor has his equity in a private fee interest. There is absolutely no benefit to the City interests in having such a policy restricting the investor's ability to mortgage only his interest in the leasehold. Nor is it in any way a detriment to the City's interest in the property. Other cities, including the City of San Diego, ignore the State Land Commission on this policy and approve refinancing on their Tidelands Trust properties.
2. Widening of the lateral access requirement from 8 feet to twelve feet in instances where the 8 foot access was already provided and the master lessee is changing use or doing less than a complete redevelopment of the property.
3. Requiring additional mitigations for sea level rise where the likelihood of sea level rise in excess of the available freeboard of 7 feet in the next 100 years is less than ½ of 1% probability. Higher development costs mean higher rents to subtenants and businesses to meet expenditures which in some cases can get too expensive for the market.

Because an astute investor must take seriously the city's policies when considering investing in these properties, these kinds of policies and exactions serve devalue the City's own assets by reducing the potential pool of investment capital. The EML would encourage the City Council to resist the agencies' urge to apply them.

Work Force Housing/Employee Retention and Recruitment

The City of Morro Bay, because it is a desirable tourist destination, will continue to have a shortage of housing affordable to the workforce needed to staff the businesses that we have described herein as the major economic driver of the economy for Morro Bay. The Morro Bay Chamber of Commerce has addressed these difficult issues in their Legislative Platform.

"If we don't seriously address the housing issue in Morro Bay, we will continue our precarious reliance on a workforce that lives someplace else in the County; we will keep degrading the environment through excessive greenhouse gas emissions and other emissions associated with commuter travel; and, we will become a community that is composed solely of older retirees and visitors with no resident workforce, families, or middle class."

The Chamber has a policy of not advocating for any particular project preferring to address legislative issues with overarching policy positions. That may be appropriate for the Chamber, but the EML takes the position that a vital issue such as this needs to be addressed with specifics if it is ever to be effectively remediated.

The EML would recommend that the City Council begin to identify potential sites within the City and direct staff to initiate conversations with property owners to see if the City can assist with specific planning processes for those sites to move them closer to entitled building sites. This will begin to move the process as far forward as possible in order to encourage private sector development of work force housing.

Potential sites such as the elementary school site and property near the care facility are likely candidates for such an effort in the short term. The Chamber's Legislative Platform goes on to say…."This Housing Element should look at all of the opportunity sites that are in the Land Use Element and it should explore other areas that can be considered for future growth. The property south of the Harbor Tract and adjacent to the retirement/care facility off of South Bay Blvd is one example. Even though the City Sphere of Influence (SOI) is limited to nearly the City boundary line, there are still opportunities that can be considered. Large comprehensively planned housing projects would significantly improve the economic sustainability of Morro Bay." We support the Chamber's position but would encourage the City Council to move away from the generalities and adopt specific strategies for specific sites. We also recognize that not all large areas are conducive to a higher density than SFR, so the importance of site specific analysis is that much more important.

Closing

In closing, the EML feels it prudent and encourages the City Council to set new policies that support and defend the Tidelands Trust properties not only as a significant City asset but more

importantly from the standpoint that the City **is** the **property owner** of these waterfront leases. The relationship with the master leaseholders and other sub tenants should be seen as partners in its economic success which outlook is key in the efforts to responsibly fund the needed and vital city services on the waterfront.

RESOLUTION NO. 102-22

RESOLUTION OF THE CITY COUNCIL OF THE CITY OF MORRO BAY, CALIFORNIA, AUTHORIZING THE ADDITION OF (1) HARBOR PATROL OFFICER, THEREBY INCREASING HARBOR DEPARTMENT STAFFING BY ONE FULL-TIME EQUIVALENT (FTE) POSITION, AND APPROVING THE ASSOCIATED BUDGET AMENDMENT FOR THE REMAINDER OF FISCAL YEAR (FY) 2022-23

THE CITY COUNCIL
City of Morro Bay, California

WHEREAS, the City of Morro Bay is required to appropriate and expend funds, to conduct the day-to-day business activity of the City; and

WHEREAS, on June 28, 2022, the City Council approved the FY 2022-23 Operating and Capital Budget, including associated staffing levels necessary to provide City services; and

WHEREAS, the Council desires to authorize the hiring of one additional Harbor Patrol Officer, thereby increasing Harbor Department staffing by one full-time equivalent (FTE) position; and

WHEREAS, the formal approval of the pay schedules requires that they are duly approved and adopted by the City Council, and the 2 CCR 570.5 regulation requires the re-adoption of the Salary Schedule for Fiscal Year 2021-22, attached as Exhibit A and incorporated herein by reference.

NOW, THEREFORE, BE IT RESOLVED the City Council of the City of Morro Bay does hereby:

1. The City Council approves an increase in the City's Full-Time Equivalent (FTE) staff in the Harbor Department by one from six to seven.
2. The Harbor operating budget is amended to reflect the cost increase of $69,285 for full-time staffing and benefits for the remainder of FY 22-23.
3. A summary list of budgeted and authorized full-time equivalent (FTE) employees, including the detailed change for the Harbor Department is attached hereto as Exhibit A.

PASSED AND ADOPTED by the City Council of the City of Morro Bay at a regular meeting thereof held on the 22nd day of November 2022 by the following vote:

AYES:
NOES:
ABSENT:
ABSTAIN:
RECUSE:

_____
JOHN HEADDING, Mayor

ATTEST:

_____
DANA SWANSON, City Clerk

EXHIBIT "A"

CITYWIDE SUMMARY

	2022-23 Budget	2022-23 Proposed
Total City FTEs		
City Manager	5.0	5.0
Administrative Services	9.0	9.0
Recreation Services	4.0	4.0
Community Development Dept	7.0	7.0
Police Department	22.5	22.5
Fire Department	15.0	15.0
Public Works	36.6	36.6
Harbor Department	6.0	7.0
Total City-wide FTEs	**105.1**	**106.1**

	2022-23 Budget	2022-23 Proposed
Harbor Department		
Harbor Director	1.0	1.0
Harbor Business Coordinator	1.0	1.0
Harbor Patrol Supervisor	1.0	1.0
Harbor Patrol Officer	3.0	4.0
Administrative Technician	0.0	0.0
Total Department FTEs	**6.0**	**7.0**

AGENDA NO: C-4
MEETING DATE: November 22, 2022

Staff Report

TO: **Honorable Mayor and City Council** **DATE: November 16, 2022**

FROM: **Chris F. Neumeyer, City Attorney**

SUBJECT: **Discuss and Consider Adoption of Resolution No. 103-22, adopting the City of Morro Bay's Flagpole Policy; and Consider Adoption of Resolution No. 104-22 Approving the Flying of the Rainbow Pride Flag at City Hall during the month of June in Recognition of Lesbian, Gay, Bisexual, Transgender, Queer, Plus (LGBTQ+) Pride Month in the City of Morro Bay**

RECOMMENDATION

Staff recommends Council consider:

1. Adoption of Resolution No. 103-22, adopting the City of Morro Bay's Flagpole Policy; and
2. Adoption of Resolution No. 104-22 Approving the Flying of the Rainbow Pride Flag at City Hall during the month of June in Recognition of Lesbian, Gay, Bisexual, Transgender, Queer, Plus (LGBTQ+) Pride Month in the City of Morro Bay.

ALTERNATIVES

Do not consider adoption of one or both of the attached resolution and/or provide alternative direction to staff.

FISCAL IMPACT

No immediate fiscal impact.

BACKGROUND

At the June 28, 2022, City Council meeting the City Council under the Presentations part of the meeting approved and presented a proclamation declaring June 2022 as Lesbian, Gay, Bisexual, Transgender, Queer and Plus (LGBTQ+) Pride month symbolizing the City's celebration of diversity and support for the lesbian, gay, bisexual, transgender, queer and plus community. During Future Agenda Items, the City Council requested staff return with a policy to raise non-traditional flags with a goal of having that policy in place to raise the Pride Flag in June 2023 and raise the Pride flag on a City flagpole for the remainder of June during Pride month.

DISCUSSION

There are constitutional concerns as to whether the City Council can limit free speech through a flag policy or allow religious flags or flags that advocate for a policy party of issue. The first amendment to the United States Constitution states:

Prepared By: __ CN___	**Dept Review: _____**
City Manager Review: SC_	**City Attorney Review: LNL / EQG**

"Congress shall make no law respecting an establishment of religion, or prohibiting the free exercise thereof; or abridging the freedom of speech, or of the press; or the right of the people peaceably to assemble, and to petition the Government for a redress of grievances."

Constitutional Freedom of Speech

Forum Analysis

The First Amendment does not require government, in general, to always allow all speech and at all locations. "Even protected speech is not equally permissible in all places and at all times. Nothing in the Constitution requires the Government freely to grant access to all who wish to exercise their right to free speech on every type of Government property without regard to the nature of the property or to the disruption that might be caused by the speaker's activities.[1]" Thus, the Supreme Court has adopted what is known as "forum analysis" to determine whether government can control speech on government-owned property.

A "traditional public forum" is a place that has traditionally been used by the public for the free exchange of ideas such as a public park. In pre-Twitter days, standing on a soapbox in the public square was the easiest way for a speaker to reach the most people. Regulations on speech in a traditional public forum must serve a compelling government interest and the regulation be narrowly drawn to achieve that interest. This is known as the strict scrutiny test.[2]

A "designated or limited public forum" is property that the government has intentionally opened for expressive activity under certain conditions, with limitations on the content of speech subject to strict scrutiny, but with other restrictions just needing to be reasonable. The City Council Chambers is an example of a designated or limited public forum during a City Council meeting in which there can be time limits on public speakers, but the public cannot be prohibited from criticizing City government.[3] This concept of strict scrutiny on the content of speech is sometimes referred to as "viewpoint neutrality."

A "nonpublic forum" is all remaining government property that is not dedicated to general debate or the free exchange of ideas. Reasonable restrictions are allowed in a nonpublic forum if the intent is not to suppress speech due to the speaker's viewpoint.[4]. Once the government allows public speech on nonpublic forum property- "opens the forum"- then it has arguably created a "designated or limited public forum" where the limitations on the content of speech are subject to strict scrutiny with other restrictions needing to be reasonable. Likewise, a city that has allowed public speech on nonpublic forum property can choose to adopt a policy to close that forum. This was the case when the City of Lexington, Virginia, decided to no longer allow third-party groups to fly flags on streetlight flagpoles throughout the city -- other than the flags of the United States, Virginia and Lexington -- after the Sons

---

[1] *Clark v Burleigh (1992) 4 Cal. 4th 474, 482, quoting Cornelius v NAACP Legal Defense & Educ. Fund (1985) 473 US 788*.

[2] *Ward v Rock Against Racism (1989*) 491 US 781(consistent sound amplification restrictions on a rock concert in a public park did not violate First Amendment.) "If there is a bedrock principle underlying the First Amendment, it is that the government may not prohibit the expression of an idea simply because society finds the idea itself offensive or disagreeable." *Texas v. Johnson (2015) 491 U.S. 397, 414.*

[3] See *White v City of Norwalk* (9th Cir 1990) 900 F2d 1421.

[4] *Cornelius v NAACP Legal Defense & Educ. Fund* (1985) 473 us 788.

of Confederate Veterans flew Confederate flags throughout the city.[5]

Government Speech

However, when the State is speaking on its own behalf ("government speech"), the First Amendment restrictions related to various types of government-established forums do not apply.[6] The Supreme Court provided this example of government speech in the *Matal* case:

> "During the Second World War, the Federal Government produced and distributed millions of posters to promote the war effort. There were posters urging enlistment, the purchase of war bonds, and the conservation of scarce resources. These posters expressed a viewpoint, but the First Amendment did not demand that the Government balance the message of these posters by producing and distributing posters encouraging Americans to refrain from engaging in these activities."[7]

A unanimous Supreme Court ruled on May 22, 2022, in *Surtleff v City of Boston*[8] that the City of Boston violated the free speech rights of a conservative activist when it refused his request to fly a Christian flag on a flagpole outside City Hall.

Justice Stephen Breyer wrote for the court that the city discriminated against the activist, Harold Shurtleff, because of his "religious viewpoint," even though it had routinely approved applications for the use of one of the three flagpoles outside City Hall that fly the U.S., Massachusetts and Boston flags. The city had approved 284 consecutive applications to fly flags, usually those of other nations, before it rejected Shurtleff's because it was a Christian flag. The high court said the lower courts and the city were wrong. The case hinged on whether the flag-flying is an act of the government, in which case Boston can do whatever it wants, or private parties like Shurtleff, Justice Breyer wrote.

> "Finally, we look at the extent to which Boston actively controlled these flag raisings and shaped the messages the flags sent. The answer, it seems, is not at all. And that is the most salient feature of this case." Breyer wrote that "the city's lack of meaningful involvement in the selection of flags or the crafting of their messages leads us to classify the flag raisings as private, not government, speech—though nothing prevents Boston from changing its policies going forward."

This case stands for the proposition that in order to shape the message the flags send as government and not private speech the City should have a written policy and clear guidelines. In summary, regarding the First Amendment and Freedom of Speech issues, the display of flags at City facilities

---

[5] *Sons of Confederate Veterans v. City of Lexington (*2012) 894 F. Supp. 2d 769.

[6] See *Walker v. Texas Division, Sons of Confederate Veterans, Inc*. (2015) 135 S. Ct. 2239 (Supreme Court held that Texas' specialty license plate designs are governmental speech and the State was allowed to reject a flag design with the Confederate flag); *Pleasant Grove City v. Summum* (2008) 555 U.S. 460 (Supreme Court found that the display of a permanent monument in a public park is governmental speech not subject to forum analysis) "[T]he First Amendment forbids the government to regulate speech in ways that favor some viewpoints or ideas at the expense of others, [citations omitted] but imposing a requirement of viewpoint- neutrality on government speech would be paralyzing."

[7] *Matal v. Tam (2017) 137 S. Ct. 1744, 1758*.

[8] *Surtleff et al. v City of Boston et al. (2022)* 142 S.Ct. 1583.

beyond the flags of the United States, State of California and City raises First Amendment Free Speech issues and thus the potential for litigation. Those issues depend, in part, on whether the flag is treated as government speech by the City or an opportunity for speech on public property by members of the public ("designated public forum"). If a flagpole is deemed by the City (or later determined by a court) to be "designated public forum" under the First Amendment, the City could not choose which commemorative flags to fly, except on a content-neutral basis. Thus, under the "designated public forum" approach, the City would not be able to avoid disfavored or potentially divisive flags as the City of Lexington discovered after Confederate flags were flown there or the City of Boston found with reference to Mr. Shurtleff's Christian flag.

However, under the "government speech doctrine", the City may, in accordance with a written policy creating meaningful involvement by the legislative body in the selection of the flags and the selection of their message to advance its own government speech on flagpoles it controls- *i.e.*, messages conveyed by flags - without requiring viewpoint neutrality, but will face other potential constraints on governmental speech, such as endorsing a religion or a political party under either the United States Constitution or California Constitution or laws.

Establishment Clause

Government speech must still comply with the Establishment Clause.[9] In determining whether a governmental regulation or governmental speech impermissibly "establishes" religion, the United States Supreme Court looks to the following factors:

1) Does the activity have a valid state secular purpose - does not endorse nor disapprove of religion;
2) Does the activity have a principal or primary effect that neither advances nor inhibits religion; and
3) Does the activity not foster an excessive government entanglement with religion[10]?

The governmental regulation on speech cannot have the purpose or effect of endorsing, favoring or promoting religion - or disapproving of religion.[11] If the City holds the position that flags on City flagpoles are government speech - i.e. the viewpoint of the City -- a flag waving on a City flagpole at City Hall would be attributed to the City as the speaker. Further, a flag of a religion or religious movement waving alongside two other powerful governmental symbols -- the flags of the United States and the State of California -would seem to send a strong message of endorsement.

There are historic examples of nonsecular references in governmental operations, such as the motto "In God We Trust" on American money; National Days of Prayer; and reference to "God" in the Pledge of Allegiance to the Flag.[12] These long-standing uses of nonsecular references to religious heritage

---

[9] *Pleasant Grove City v. Summum,* 555 U.S. at 468.

[10] *Lemon v. Kurtzman* (1971) 403 U.S. 602.

[11] "Endorsement sends a message to nonadherent that they are outsiders, not full members of the political community, and an accompanying message to adherents that they are insiders, favored members of the political community. Disapproval sends the opposite message." (*Lynch v. Donnelly* (1984) 465 U.S. 668, 688-89 (O'Connor, J. concurring).)

[12] *Lynch v. Donnelly* (1984) 465 U.S. 688, 674-678. The United States Supreme Court described these as "illustrations of the Government's acknowledgement of our religious heritage and governmental sponsorship of graphic manifestations of that heritage." (*Lynch* 465 U.S. at 677.) In challenges to the motto on money, the federal Ninth Circuit Court held that the motto was not the

are treated somewhat differently by the courts. However, a newly created "Christian flag" that has not been part of the religious heritage in the United States or California would arguably not be given the same deference. Further, California's broader legal separation of church and state would suggest even less deference to a new Christian flag flying from a City Hall flagpole. To that end, the Ninth Circuit has found that the Latin crosses on a city's official insignia violated the California Constitution's "no preference" clause.[13]

There have also been many cases regarding religious displays on public property that balance the question of avoiding a violation of the First Amendment's prohibition on the establishment of religion with the First Amendment's freedom of speech. These are fact-based determinations, typically in the context of a public forum (like a public park) or a limited public forum (like the entryway to a county courthouse) and not in the context of "governmental speech." If a religious display in a traditional public forum like a public park can violate the First Amendment's Establishment Clause and the California Constitution's additional "no preference" clause, then arguably a flagpole with a religious flag that the City is deeming not to be a public forum but government speech would cross the line of government endorsing religion.

First Amendment's Free Exercise of Religion Clause

As to the Free Exercise of Religion Clause of the First Amendment, courts evaluate the following factors in determining whether a governmental practice impermissibly interferes with the free exercise of religion[14]:

1) The magnitude of the statute's impact on the exercise of the religious belief;
2) The existence of a compelling state interest justifying the imposed burden on the exercise of the religious belief; and
3) The extent to which recognition of an exemption from the statute would impede the state's objectives.

A flag waving on a city flagpole does not impact the exercise of religion: it does not allow nor prohibit the free exercise of religion. People can practice religion - or not practice religion - regardless of whether there is a flag flying at City Hall. The City's interest in avoiding an Establishment Clause violation would arguably be compelling even if an argument could be made that not allowing flags of a religious movement somehow impacts the exercise of a religious belief.

Prohibition on Partisan Flags or Advocating a Certain Vote in an Election

Under the government speech doctrine, the City may generally advance its own speech without requiring viewpoint neutrality, subject to Constitutional and other legal limits. In considering other categories of speech that would be problematic, a flag of a political party would seem to violate the nonpartisan nature of local elections.[15] Likewise, the use of City resources to make and fly a flag

---

establishment or sponsorship of religion, but "its use is of a patriotic or ceremonial character it is excluded from First Amendment significance because the motto has no theological or ritualistic impact." (*Newdow v. Lefevre* (9th Cir. 2007) 598 F 3d 638, 644 quoting *Aronow v. United States* (9th Cir. 1970) 432 F. 2d 242)).

[13] *Ellis v City of La Mesa* (9th Cir 1993) 990 F2d 1518.

[14] *Callahan v Woods* {9th Cir 1984) 736 F2d 1269, 1273, citing *EEOC v Pacific Press Publ'g Ass'n* (9th Cir 1982) 676 F2d 1272, 1279. (on the issue of whether plaintiff could obtain welfare benefits without a social security number because of his belief that numbers are "the mark of the Antichrist").

[15] Cal. Elections Code section 334.

advocating a certain election result would likely violate the California Supreme Court's restriction on the use of public funds to assist the passage or defeat of a ballot measure.[16]

CONCLUSION

Flagpoles on City property, including those at the City Hall, are not traditionally intended to serve as a forum for free speech by the public. Instead, and in accordance with a written policy, these flagpoles can be treated as a nonpublic forum used by the City for expressing its own governmental speech. Under the governmental speech doctrine, the City can choose to fly only the flags of the United States, State of California and the City. The City could also choose to fly commemorative flags; although, this would increase the risk of a legal challenge once decisions are made to fly some flags but not others. Nonetheless, the government speech doctrine supports the City Council advancing its own government speech on City flagpoles without requiring viewpoint neutrality, so long as the City Council does not endorse a flag of a religion or political party or a particular outcome in an election or any other prohibited subjects under federal or state law.

The attached policy (Attachment 1) complies with current legal and Constitutional restraints and would allow the City Council to select and display a Commemorative Flag. The second proposed resolution (Attachment 2) would authorize the raising of the Rainbow Pride Flag during the month of June.

ATTACHMENTS

1. Resolution No. 103-22 adopting a Flagpole Policy
2. Resolution No. 104-22 authorizing the raising of the Rainbow Pride Flag during the month of June

[16] *Stanson v. Mott* (1976) 17 Cal. 3d 206.

RESOLUTION NO. 103-22

**RESOLUTION OF THE CITY COUNCIL
OF THE CITY OF MORRO BAY, CALIFORNIA,
APPROVING A FLAGPOLE POLICY**

**T H E C I T Y C O U N C I L
City of Morro Bay, California**

WHEREAS, the City of Morro Bay displays and handles all flags in accordance with Federal and State law; and

WHEREAS, the City does not have local rules or guidelines regarding the display of flags at City facilities; and

WHEREAS, the City wishes to adopt a policy to provide clear guidelines about the display of flags at City facilities that declares the City's flagpoles are not intended to be a forum for free expression by the public, but rather are used to express official views of the City; and

WHEREAS, said City facilities and flagpoles are under the exclusive control of the City and are not public forums for the expression of the view of the public.

NOW, THEREFORE, BE IT RESOLVED by the City Council of the City of Morro Bay, California, does hereby approve and adopt the policy for the display of flags at City facilities as provided in Exhibit A attached hereto.

PASSED AND ADOPTED, by the City Council of the City of Morro Bay, at a regular meeting thereof held on the 22nd day of November 2022, by the following vote:

AYES:
NOES:
ABSENT:
ABSTAIN:
RECUSE:

_____
JOHN HEADDING, Mayor

ATTEST:

_____
DANA SWANSON, City Clerk

01181.0001/837463.1

Exhibit A

CITY OF MORRO BAY POLICY FOR FLYING FLAGS AT CITY FACILITIES

It is the policy of the City of Morro Bay that the City's flag poles are not intended to serve as a forum for free expression by the public but rather for the display of the Flags of the United States and the State of California. The flag poles located at all City facilities may also be used to display the flags of the City of Morro Bay, Sister Cities, the existing POW Flag and any Commemorative Flags as may be authorized by the City Council as an expression of the City's official sentiments.

A Commemorative Flag under this policy means a flag that identifies with a specific date historical event, cause, nation or group of people, whereby the City honors or commemorates the date, event, cause, nation, or people by flying the flag.

Commemorative Flags shall be displayed at City facilities only upon City Council direction and upon adoption of a resolution by a majority vote, consistent with the City's vision, mission, and ongoing and strategic priorities.

Commemorative Flags shall be displayed for a period of time that is reasonable or customary for the subject that is to be commemorated, but no longer than 30 continuous days or one calendar month. No more than one commemorative flag shall be displayed in any given period. This Policy shall remain in effect until modified by the City Council.

RESOLUTION NO. 104-22

**RESOLUTION OF THE CITY COUNCIL
OF THE CITY OF MORRO BAY, CALIFORNIA,
APPROVING THE FLYING OF THE RAINBOW PRIDE FLAG AT CITY HALL THROUGHOUT THE MONTH OF JUNE AS RECOGNITION OF JUNE AS LESBIAN, GAY, BISEXUAL, TRANSGENDER, QUEER, PLUS (LGBTQ+) PRIDE MONTH IN THE CITY OF MORRO BAY**

**T H E C I T Y C O U N C I L
City of Morro Bay, California**

WHEREAS, the City of Morro Bay has a diverse Lesbian, Gay, Bisexual, Transgender, Queer, Plus (LGBTQ+) community and is committed to supporting visibility, dignity, and equity for all people in the community; and

WHEREAS, many of the residents, students, employees, and business owners within the City of Morro Bay who contribute to the enrichment of our City are part of the LGBTQ+ community; and

WHEREAS, the City of Morro Bay strives to be a place where all residents and visitors feel accepted and welcome; and

WHEREAS, the Rainbow Flag, also known as the LGBTQ+ Pride Flag or Gay Pride Flag, has been used since the 1970s as a symbol of LGBTQ+ pride and social movements; and

WHEREAS, on June 28, 2022, the City Council of the City of Morro Bay declared the month of June as Lesbian, Gay, Bisexual, Transgender and Queer Pride month symbolizing the City's celebration of diversity and support for the Lesbian, Gay, Bisexual, Transgender, Queer and Plus community; and

WHEREAS, the City Council has this date adopted a Flagpole Policy; and

WHEREAS, the Council of the City of Morro Bay wishes to establish the Rainbow Pride Flag as a commemorative flag of the City of Morro Bay in accordance with the Flagpole Policy to communicate its support for diversity, inclusivity, equality, and respect in our City; and

WHEREAS, flying the City's Rainbow Pride Flag during the month of June further symbolizes Morro Bay's official recognition of June as LGBTQ+ Pride month and reflects the City of Morro Bay's viewpoint, and symbolizes the City's celebration of diversity and support for the LGBTQ+ community.

NOW, THEREFORE, BE IT RESOLVED that the City Council of Morro Bay, California does hereby find, determine and approve as follows:

Section 1. Approving the flying of the Rainbow Pride Flag at City Hall throughout the month of June.

Section 2. This resolution shall become effective immediately upon its passage and adoption.

PASSED AND ADOPTED, by the City Council of the City of Morro Bay, at a regular meeting thereof held on the 22nd day of November 2022, by the following vote:

AYES:
NOES:
ABSENT:
ABSTAIN:
RECUSE:

_____
JOHN HEADDING, Mayor

ATTEST:

_____
DANA SWANSON, City Clerk

AGENDA NO: C-5
MEETING DATE: November 22, 2022

Staff Report

TO: **Honorable Mayor and City Council** **DATE: November 16, 2022**

FROM: **Scott Collins, City Manager**

SUBJECT: **Approve an Updated Memorandum of Understanding for Sharing Central Coast Community Energy Board Seats**

RECOMMENDATION

Staff recommends the City Council:

1. Approve an amendment to the Agreement and Memorandum of Understanding with the City of San Luis Obispo for sharing Policy Board, Operations Board, and Community Advisory Committee seats on Central Coast Community Energy; and
2. Authorize the City Manager to execute the Amendment to the Agreement and Memorandum of Understanding in a form subject to approval of the City Attorney's Office.

ALTERNATIVES

The City Council could request amendments to the MOU. Should Council request amendments, they would be provided to the City of San Luis Obispo for consideration and brought back to Council at a future date.

FISCAL IMPACT

Not applicable.

BACKGROUND/DISCUSSION

In November of 2018, the City of Morro Bay and the City of San Luis Obispo adopted ordinances and resolutions committing both cities to join Monterey Bay Community Power (MBCP). On December 5, 2018 the MBCP Policy Board unanimously voted to approve the two cities' membership. In September of 2020, MBCP officially changed its name to Central Coast Community Energy (CCCE). The organization was formed with the aim of facilitating community choice energy programs for the purpose of providing choice in the electricity market, reducing greenhouse gas emissions, proving potential rate savings, supporting energy efficiency, promoting regional collaboration, and contributing to economic development.

CCCE is governed by two Boards: 1) a Policy Board that meets quarterly and is comprised of elected officials, and 2) an Operations Board that meets at least eight times per year and is comprised of City Managers and County Administrative Officers. An Executive Committee, which is comprised of both Policy and Operations Board members, is delegated some authority under a Joint Use Agreement to address matters that are a combination of policy implementation and operations. CCCE also has a Community Advisory Council comprised of residents and business owners.

Prepared By: ___LS_____	**Dept Review: ___EE___**
City Manager Review: ___SC_____	**City Attorney Review: ___LNL___**

In CCCE, counties and jurisdictions with 50,000 or more residents hold permanent Board seats. Additional Board seats are shared by multiple jurisdictions based on geography. As part of membership in 2019, the City of San Luis Obispo and the City of Morro Bay agreed to share a seat on each of the boards and to negotiate a formal agreement for sharing the Policy Board and Operations Board seat. In December of 2018, staff from the two cities drafted and negotiated an initial draft MOU.

In 2019, additional cities and counties joined CCCE. Due to population and geographic proximity, the City of Paso Robles was added to the seat currently shared by San Luis Obispo and Morro Bay. Because of the addition of Paso Robles, the name change from MBCP to CCCE, and a mutual desire by all three cities for the City of San Luis Obispo to serve the 2021-22 term, the original 2019 MOU was updated and executed in December of 2020.

2022 CCCE MOU Update (Attachment A)
In 2022, the City of Atascadero joined CCCE and a new Policy Board and Operations seat was created for the City of Paso Robles and City of Atascadero to share. Staff from the City of San Luis Obispo and the City of Morro Bay have drafted and negotiated a third iteration of the CCCE MOU to formalize two changes: (1) the removal of the City of Paso Robles from the formal agreement and (2) the extension of the City of San Luis Obispo's current two-year term on the Policy Board by one additional year to serve on the Board through December 2023. City of Paso Robles staff have provided a letter expressing their intent to be removed from the current MOU, see Exhibit A to Attachment 1.

The City of San Luis Obispo and City of Paso Robles staff concurs with this report. The City of Paso Robles submitted a letter to the City sharing its agreement to be removed from the current MOU and the City of San Luis Obispo City Council has approved the updated Memorandum of Understanding at a regularly scheduled meeting held November 15, 2022.

Previous Council Action

- November 2018 – City of Morro Bay joins 3CE and commits to sharing a Policy Board and Operations Board seat with the City of San Luis Obispo.
- December 2020 – Council approves amendment to the City's MOU with San Luis Obispo to include Paso Robles.

ATTACHMENT

1. Updated CCCE MOU with Morro Bay

AMENDMENT TO AGREEMENT

THIS AMENDMENT TO AGREEMENT is made and entered in the City of Morro Bay on _____, by and between the CITY OF SAN LUIS OBISPO, a municipal corporation, hereinafter referred to as San Luis Obispo, the CITY OF MORRO BAY, a municipal corporation, hereinafter referred to as Morro Bay.

WITNESSETH:

WHEREAS, on December 18, 2020, San Luis Obispo, Morro Bay, and Paso Robles entered into an agreement to share a Central Coast Community Energy Policy Board and Operations Board seat, (the "Agreement"); and

WHEREAS, the City of Atascadero joined Central Coast Community Energy in 2022 and will share a seat with the City of Paso Robles and therefore no longer shares a seat with Morro Bay and San Luis Obispo; and

WHEREAS, the previous agreement for a shared seat is moot by the approval of the Joint Powers Agreement whereby Paso Robles and Atascadero share a seat; and

WHEREAS, San Luis Obispo, Morro Bay, and Paso Robles, desire to amend the Agreement to remove Paso Robles from the Agreement and to extend San Luis Obispo's term on the Policy Board by one year, as set forth in Exhibit B attached hereto.

NOW THEREFORE, in consideration of their mutual promises, obligations and covenants hereinafter contained, the parties hereto agree as follows:

1. Paso Robles has indicated its intent to rescind from the Agreement as reflected in the letter attached as Exhibit A; and

2. The Agreement is hereby amended to reflect Paso Robles' recission from the Agreement as set forth in Exhibit B attached hereto, which reflects an amended and restated version of the Agreement and limits the parties to Morro Bay and San Luis Obispo.

IN WITNESS WHEREOF, the parties hereto have caused this instrument to be executed the day and year first written above.

CITY OF SAN LUIS OBISPO

_____

Derek Johnson, City Manager, City of San Luis Obispo

CITY OF MORRO BAY

_____

Scott Collins, City Manager, City of Morro Bay

EXHIBIT A

PASO ROBLES' LETTER EXPRESSING INTENT TO RESCIND FROM THE MEMORANDUM OF UNDERSTANDING

CITY OF EL PASO DE ROBLES
"The Pass of the Oaks"

November 17, 2022

Derek Johnson, City Manager
City of San Luis Obispo
990 Palm Street
San Luis Obispo, CA 93401

Scott Collins, City Manager
City of Morro Bay
595 Harbor Street
Morro Bay, CA 93442

Re: Central Coast Community Energy Board Appointment Memorandum of Understanding

Mr. Johnson and Mr. Collins,

On November 15, 2022, the Paso Robles City Council approved rescinding the City's participation in the above-referenced memorandum of understanding due to changes in the 3CE governance model. This letter is intended to notify each party of the City's actions. The City consents to the remaining parties amending the MOU to reflect Paso Robles withdrawal from the arrangement.

With the City of Atascadero recently joining Central Coast Community Energy, the governance model changed whereby the Cities of Paso Robles and Atascadero will now share new seats on the policy and operations board. The City of Paso Robles greatly appreciates the ability to partner with each of your cities over the past two years to ensure representation on the 3CE boards. I look forward to future opportunities for regional collaboration.

Sincerely,

Ty Lewis
City Manager
City of Paso Robles, CA

EXHIBIT B

MEMORANDUM OF UNDERSTANDING BETWEEN CITY OF SAN LUIS OBISPO AND CITY OF MORRO BAY REGARDING PARTICIPATION WITH CENTRAL COAST COMMUNITY ENERGY

This MEMORANDUM OF UNDERSTANDING (MOU) is hereby made and entered into by and between the City of San Luis Obispo, a California municipal corporation and Charter City, hereinafter referred to as SAN LUIS OBISPO and the City of Morro Bay, a California municipal corporation, hereinafter referred to as MORRO BAY (SAN LUIS OBISPO and MORRO BAY hereinafter individually referred to as "party" and hereinafter collectively referred to as the "parties").

A. INTRODUCTION

In November 2018, SAN LUIS OBISPO and MORRO BAY jointly pursued community choice energy programs for the purpose of providing choice in the electricity market, reducing greenhouse gas emissions, proving potential rate savings, supporting energy efficiency, promoting regional collaboration, and contributing to economic development. The two cities pursued participating in a community choice energy program by joining Monterey Bay Community Power, which has since changed its name to Central Coast Community Energy (CCCE). On December 5, 2018, SAN LUIS OBISPO and MORRO BAY became official members of CCCE.

As outlined in the CCCE Joint Powers Agreement, the agency is governed by two decision making bodies and one advisory body:

- The Policy Board is comprised of elected officials and meets quarterly to make high level policy decisions.
- The Operations Board is comprised of City Managers or their designees and meets approximately eight times per year to make operational decisions.
- The Community Advisory Council is comprised of community members and serves in an advisory role to the Policy Board and Operations Board.

CCCE is a large agency and to ensure manageable meetings, smaller jurisdictions share seats on the Policy Board and Operations Board. Jurisdictions with 50,000 or more residents have permanent seats, while smaller jurisdictions share seats based on geographic proximity. Since SAN LUIS OBISPO and MORRO BAY are smaller than 50,000 each, the two cities will share a Policy Board and Operations Board seat.

On November 13, 2018, SAN LUIS OBISPO and MORRO BAY City Councils voted unanimously to direct staff to negotiate a Memorandum of Understanding to provide a collaborative and fair strategy for CCCE representation and to return to their respective Councils for final approval. The MOU was executed by SAN LUIS OBISPO and MORRO BAY in December of 2018. On December 8, 2020, SAN LUIS OBISPO and MORRO BAY City Councils voted unanimously to rescind and replace the original MOU with a new MOU to include the City of El Paso de Robles ("PASO ROBLES") and other minor updates. That MOU was executed by SAN LUIS OBISPO, MORRO BAY, and PASO ROBLES in December of 2020. That MOU is hereby replaced by this MOU to remove PASO ROBLES from the agreement and extend SAN LUIS OBISPO's term on the Policy Board by one year, as described below.

B. PURPOSE

The purpose of this Memorandum of Understanding is to identify a clear framework between SAN LUIS OBISPO and MORRO BAY to share governance seats on CCCE's Policy Board, Operations Board, and Community Advisory Council. This MOU rescinds and replaces the previous December 2020 MOU between SAN LUIS OBISPO, MORRO BAY, and PASO ROBLES.

It should also be noted that community collaboration and regionalism was a key value of the effort to create a local community choice energy program. This Memorandum of Understanding seeks to encourage further regional collaboration.

C. SHARED SEATS

1. Policy Board – The Policy Board representative shall serve for a term of two years and shall rotate between cities (with exception of the first two, two-year terms, which shall be held by SAN LUIS OBISPO). SAN LUIS OBISPO provided the initial representative and served the first two, two-year terms from December 2018 to December 2022. Both parties

have agreed to extend SAN LUIS OBISPO's term to serve as the Policy Board representative through December 2023, and thereafter shall transition every two years between MORRO BAY and SAN LUIS OBISPO.

a. The city with the currently serving Policy Board representative shall distribute via email to both City Councils and City Managers the meeting minutes and any additional narrative deemed necessary after each Policy Board meeting to stay informed of policy, business, or other related matters.
b. The Policy Board Director alternative shall be identified by the City currently holding the seat.

2. Operations Board – The Operations Board representative shall serve for a term of two years and may be one of two options:
   a. The City Manager for the City of the Policy Board representative; or
   b. A director or deputy-director level staff member as determined by the City Manager of the Policy Board representative.

3. Community Advisory Council – There shall be one Community Advisory Council member who shall serve a two-year term and be selected by the current Policy Board Member and their alternative. The pool of Community Advisory Committee applicants shall include all registered voters residing in the cities of San Luis Obispo and Morro Bay. The City currently providing the Policy Board representative shall conduct the Community Advisory Council selection process. The Community Advisory Council member does not need to be from the same city as the Policy Board member and the parties agree that the seat should rotate informally among the three cities.

4. In all cases, the elected officials, staff, or public representing the joint interests of SAN LUIS OBISPO and MORRO BAY, for purposes of the CCCE, shall consider the program purposes outlined in the Central Coast Community Energy Joint Exercise of Powers Agreement:
   a. Reducing greenhouse gas emissions;
   b. Providing electric power to customers at a competitive cost;
   c. Carrying our programs to increase energy efficiency;

d. Stimulating and sustaining the local economy by developing local jobs in renewable energy and energy efficiency; and
e. Promoting long-term rate stability and energy security and reliability for residents through local control of electric generation resources.

5. If a party fails to attend or otherwise comply with the CCCE JPA and bylaws, and if the seat becomes vacated because of such conduct, the next party shall serve in that seat.

D. PROCESS

SAN LUIS OBISPO City Council will appoint its respective Board Members for the two-year term by February 2019. Terms shall run for two-years starting in December and concluding in November of even- numbered years. Based on mutual agreement of the parties, SAN LUIS OBISPO will also appoint respective Board Members for the two-year term running from January 2022 through December 2024.

Future term appointees shall be made by alternating City Councils in November of the year that the term concludes (e.g., SAN LUIS OBISPO in 2022, MORRO BAY in 2024). Thereafter, the rotation shall continue in two-year periods until this MOU is amended.

E. PRINCIPAL CONTACTS

The principal contacts for this MOU are:

SAN LUIS OBISPO:

Name	Role:
Derek Johnson,	City Manager
Bob Hill,	City Lead

MORRO BAY:

Name	Role:
Scott Collins,	City Manager, City Lead

F. COST OBLIGATION

Each party to this Memorandum of Understanding shall be financially responsible for absorbing costs incurred for their own participation on the Policy Board, Operations Board, and Community Advisory Council.

G. COMMENCEMENT/EXPIRATION DATE

This Memorandum of Understanding is executed as of the date of last signature and is effective until the CCCE governance model changes, or SAN LUIS OBISPO or MORRO BAY withdraw from CCCE, or either party fails in good faith to resolve with the other party a conflict over a substantial issue concerning the CCCE or the parties' performance of this MOU. As to SAN LUIS OBISPO and MORRO BAY, this MOU is effective as of December, 2018, in so far as this MOU replaces and rescinds a prior MOU similar in substance to this MOU. Prior to such termination, the party desiring to terminate this MOU shall provide the non-terminating party with written notice of its desire to terminate and the reasons therefore. Both parties agree to engage in a meet and confer process, and, in the case of termination based on a conflict over a substantial issue concerning the CCCE or the parties' performance of this MOU, the parties shall engage with one another in good faith to resolve the conflict. If a conflict still exists after such good faith negotiations, this MOU shall terminate upon thirty (30) days final written notice.

H. LIABILITIES

It is understood that none of the parties to this Memorandum of Understanding is the agent of any of the other parties and none of the parties is liable for the wrongful acts, omissions or negligence of any other party to this MOU. Each party shall be responsible for its wrongful or negligent acts or omissions and those of its officials, officers, employees, and agents, howsoever caused, to the extent allowed by law, and shall be responsible for their own Commercial General Liability, Auto, Worker's Compensation and Errors and Omissions insurance and adherence to their respective City's policies. Each party to this Memorandum of Understanding agrees to indemnify, defend and hold the other, and their officials, officers, employees, and agents, against any liability, claim, personal injury, including death, or property damage caused by that party's negligence or willful misconduct in their performance under this Memorandum of Understanding.

I. NO ASSIGNMENT

The rights and obligations of the parties to this Memorandum of Understanding may not be assigned or delegated.

J. AMENDMENT

This Memorandum of Understanding may not be amended or modified in any manner whatsoever except by written agreement between the parties hereto.

IN WITNESS WHEREOF, the parties hereto have executed this agreement as of the last written date below.

FOR SAN LUIS OBISPO

Date: _____ _____

Derek Johnson, City Manager, City of San Luis Obispo

FOR MORRO BAY

Date: _____ _____

Scott Collins, City Manager, City of Morro Bay